ENGINE

6G7 SERIES

CONTENTS

GENERAL INFORMATION 11A- 0- 3
1. SPECIFICATIONS 11A- 1- 1
GENERAL SPECIFICATIONS 11A- 1- 1
SERVICE SPECIFICATIONS 11A- 1- 4
TORQUE SPECIFICATIONS 11A- 1-13
SEALANT 11A- 1-18
2. SPECIAL TOOLS 11A- 2- 1
3. COOLING FAN AND DRIVE BELT 11A- 3- 1
3a. COOLING FAN AND ALTERNATOR (2001 MODEL PAJERO) 11A-3a- 1
3b. VACCUM TANK AND HOSE (GDI) 11A-3b- 1
3c. EGR SYSTEM (GDI) 11A-3c- 1
4. INTAKE MANIFOLD 11A- 4- 1
4a. AIR INTAKE PLENUM (6G74) 11A-4a- 1
4b. INTAKE SYSTEM, IGNITION SYSTEM (GDI) 11A-4b- 1
5. TIMING BELT (TWO-CAMSHAFT ENGINE) 11A- 5- 1
6. TIMING BELT (FOUR-CAMSHAFT ENGINE) 11A- 6- 1
6a. INTAKE MANIFOLD (6G74) 11A-6a- 1
6b. WATER HOSE, WATER PIPE (GDI) 11A-6b- 1
6c. FUEL SYSTEM (GDI) 11A-6c- 1
7. EXHAUST MANIFOLD 11A- 7- 1
7a. TURBOCHARGER 11A-7a- 1
8. ROCKER ARMS AND CAMSHAFTS (TWO-CAMSHAFT ENGINE) 11A- 8- 1
9. CAMSHAFTS, ROCKER ARMS AND BEARING CAPS (FOUR-CAMSHAFT ENGINE) 11A- 9- 1
9a. ROCKER ARMS, CAMSHAFTS (GDI) 11A-9a- 1
10. ROCKER ARMS AND ROCKER SHAFTS (TWO-CAMSHAFT ENGINE) 11A-10- 1
11. CYLINDER HEAD AND VALVE (TWO-CAMSHAFT ENGINE) 11A-11- 1
12. CYLINDER HEAD AND VALVE (FOUR-CAMSHAFT ENGINE) 11A-12- 1
13. OIL PAN AND OIL PUMP 11A-13- 1
14. PISTON AND CONNECTING ROD 11A-14- 1
15. CRANKSHAFT, FLYWHEEL AND DRIVE PLATE 11A-15- 1
16. CYLINDER BLOCK 11A-16- 1

© Mitsubishi Motors Corporation Mar. 2000

GENERAL INFORMATION

ENGINE SECTIONAL VIEW

TWO-CAMSHAFT 12-VALVE ENGINE ON FRONT WHEEL DRIVE VEHICLE

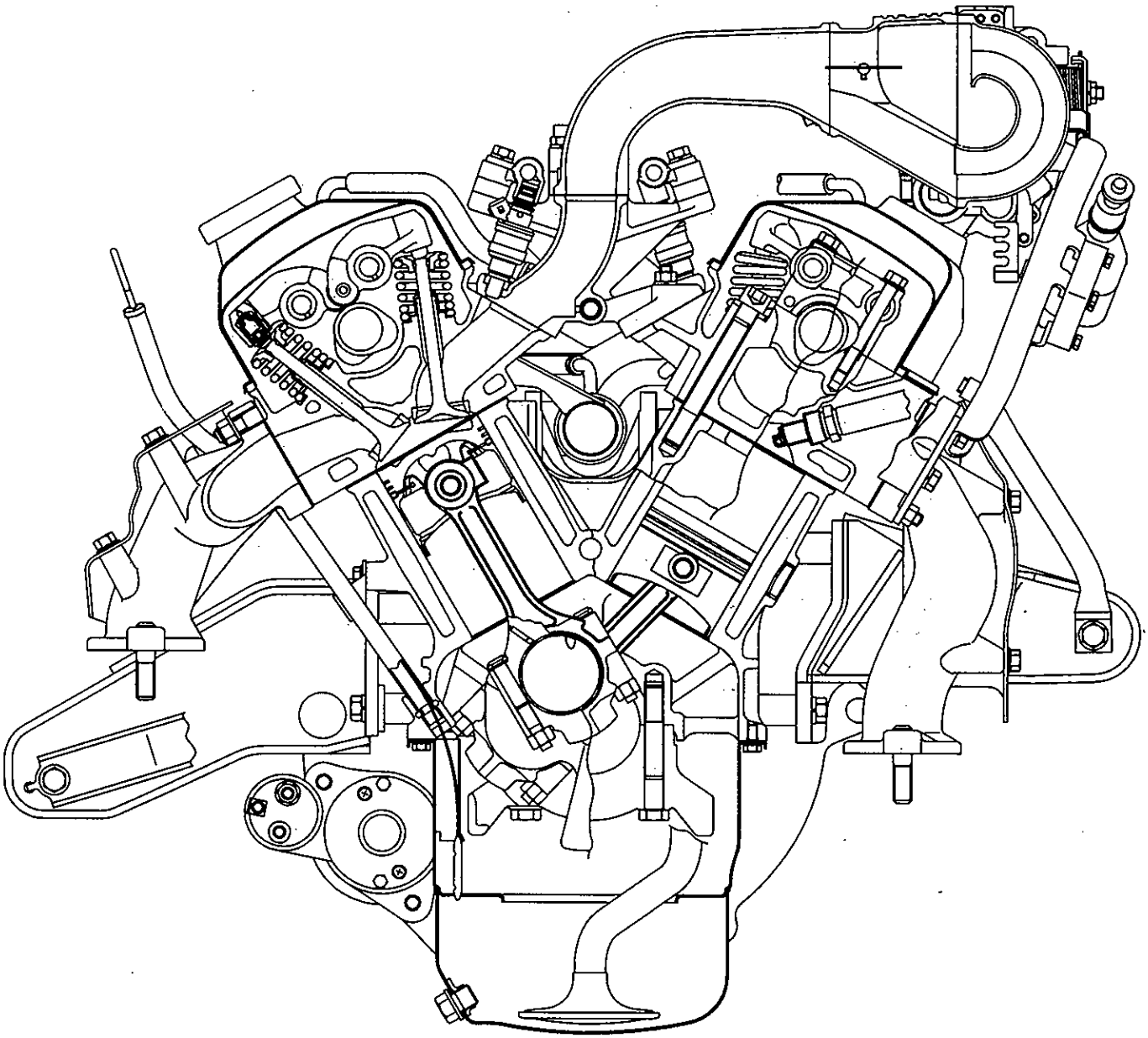

7EN0324

© Mitsubishi Motors Corporation Aug. 1994

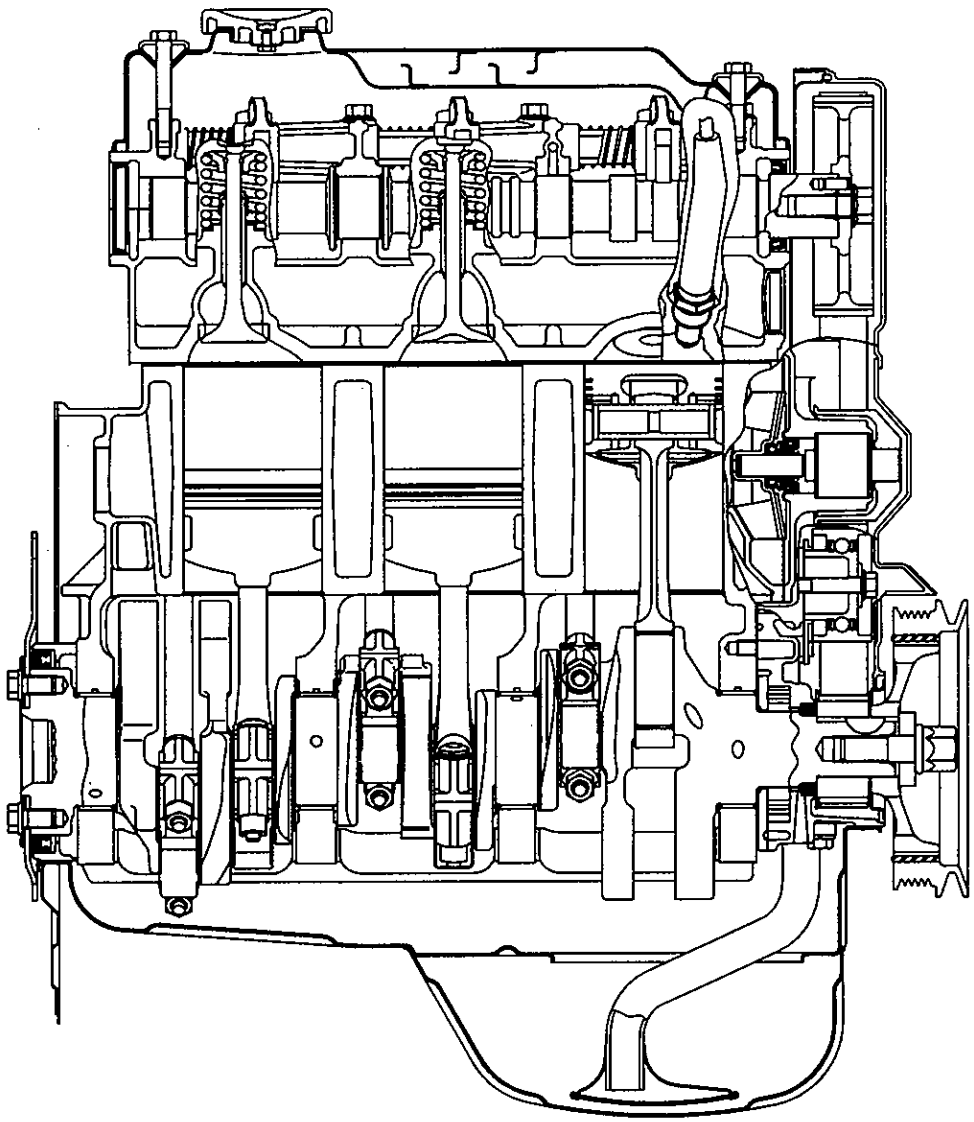

7EN0323

© Mitsubishi Motors Corporation Oct. 1990

TWO-CAMSHAFT 12-VALVE ENGINE ON REAR WHEEL DRIVE VEHICLE

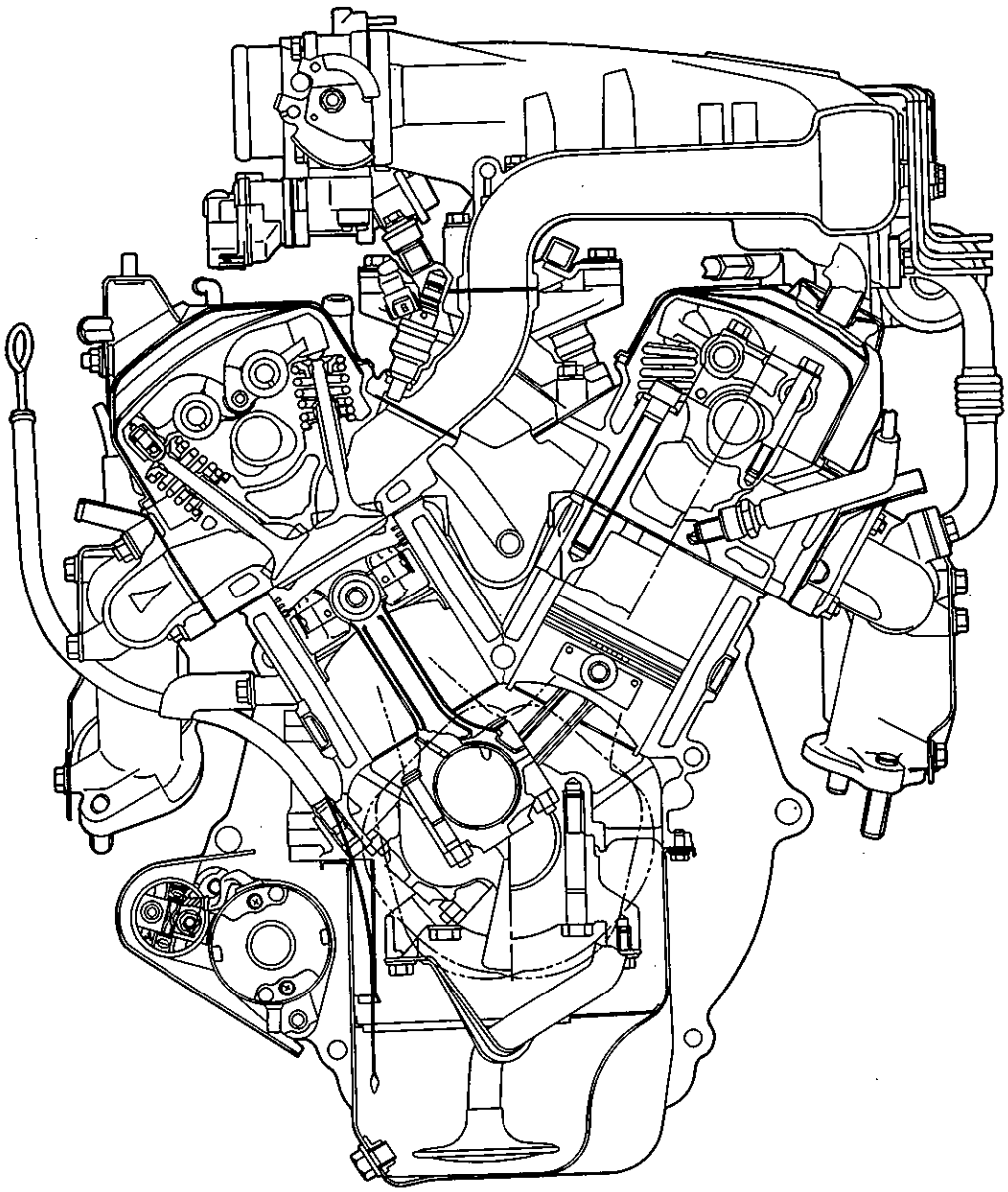

7EN0120

© Mitsubishi Motors Corporation Aug. 1994

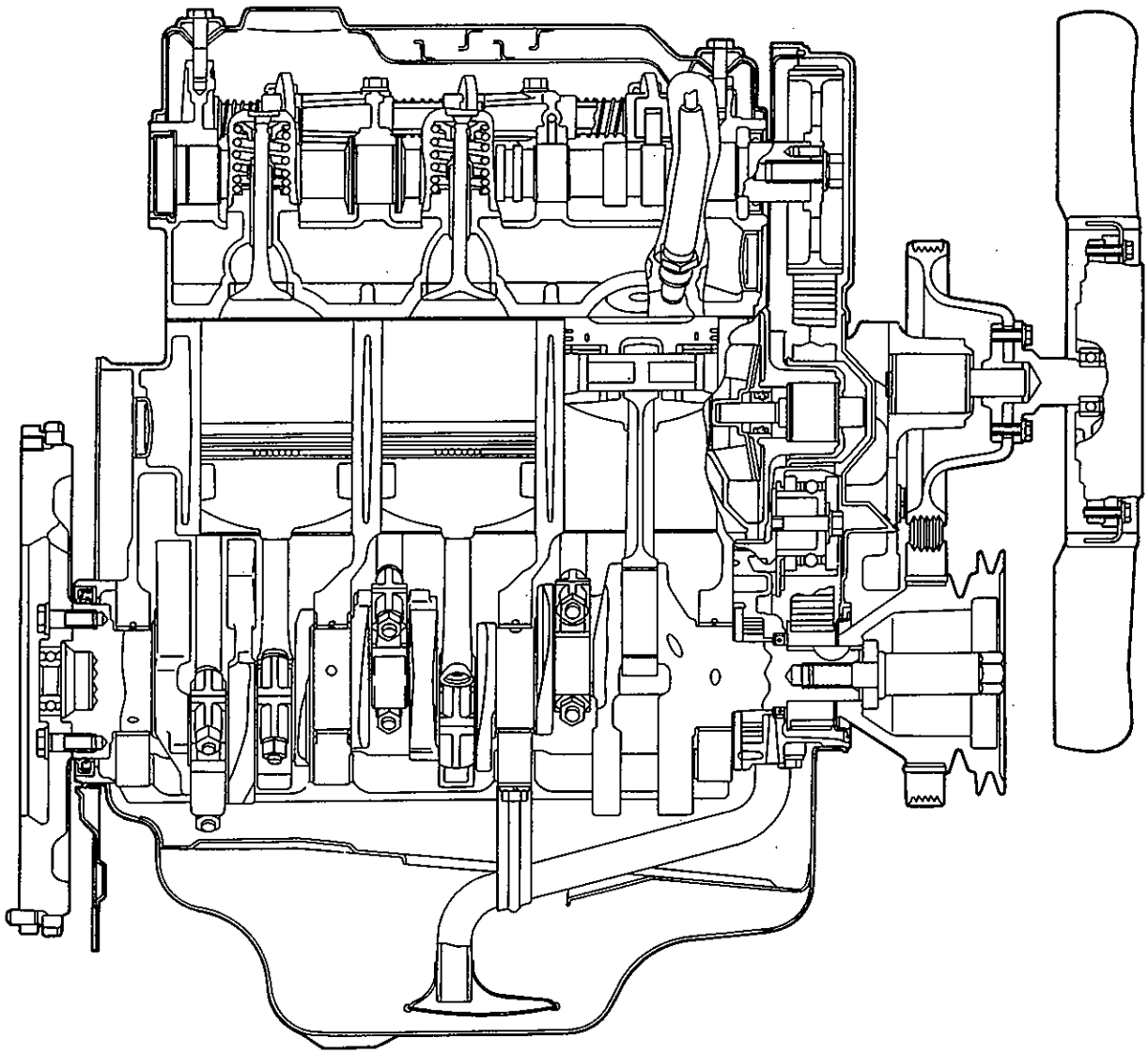

7EN0135

© Mitsubishi Motors Corporation Oct. 1990

TWO-CAMSHAFT 24-VALVE ENGINE

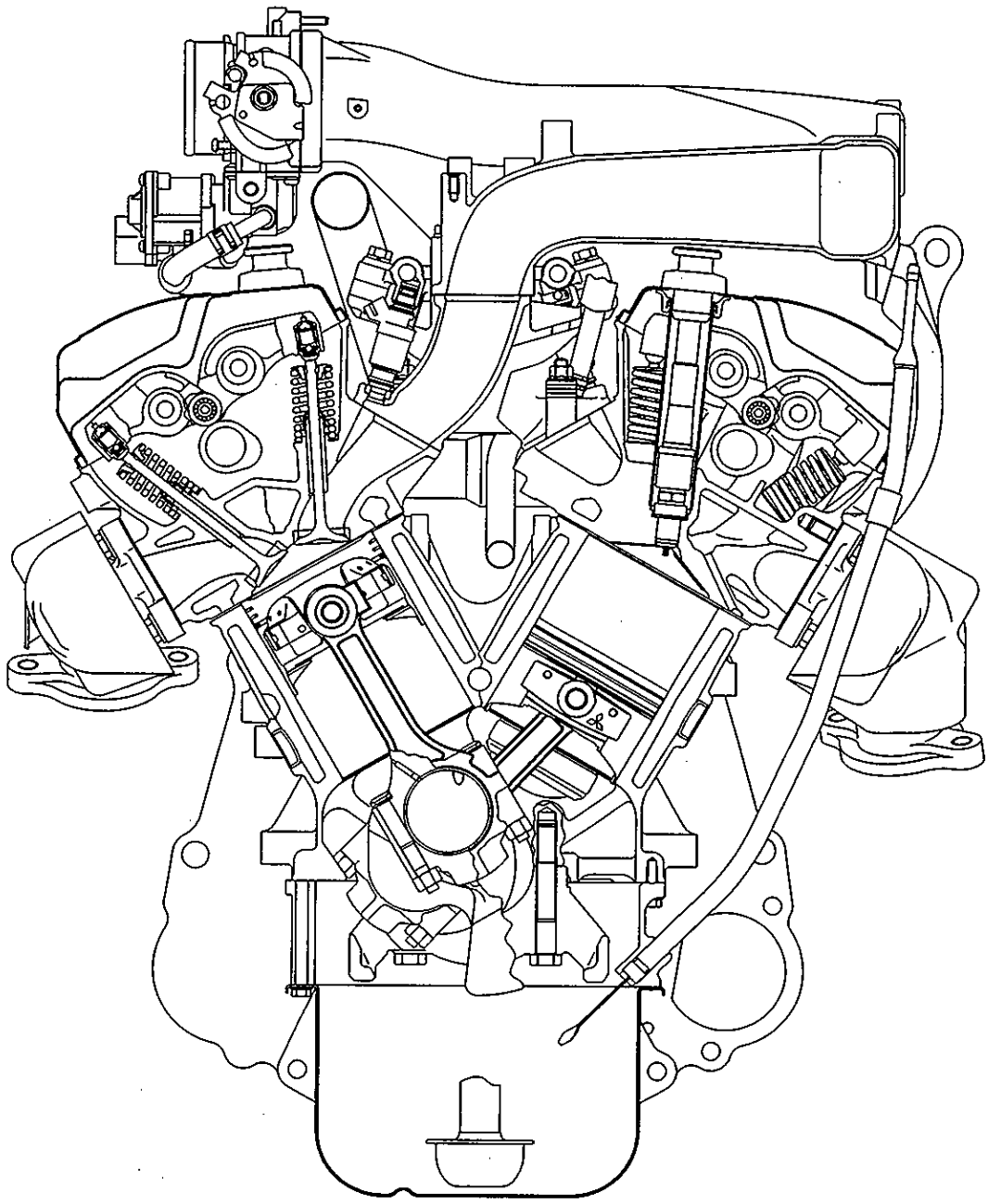

7EN0762

© Mitsubishi Motors Corporation Aug. 1994

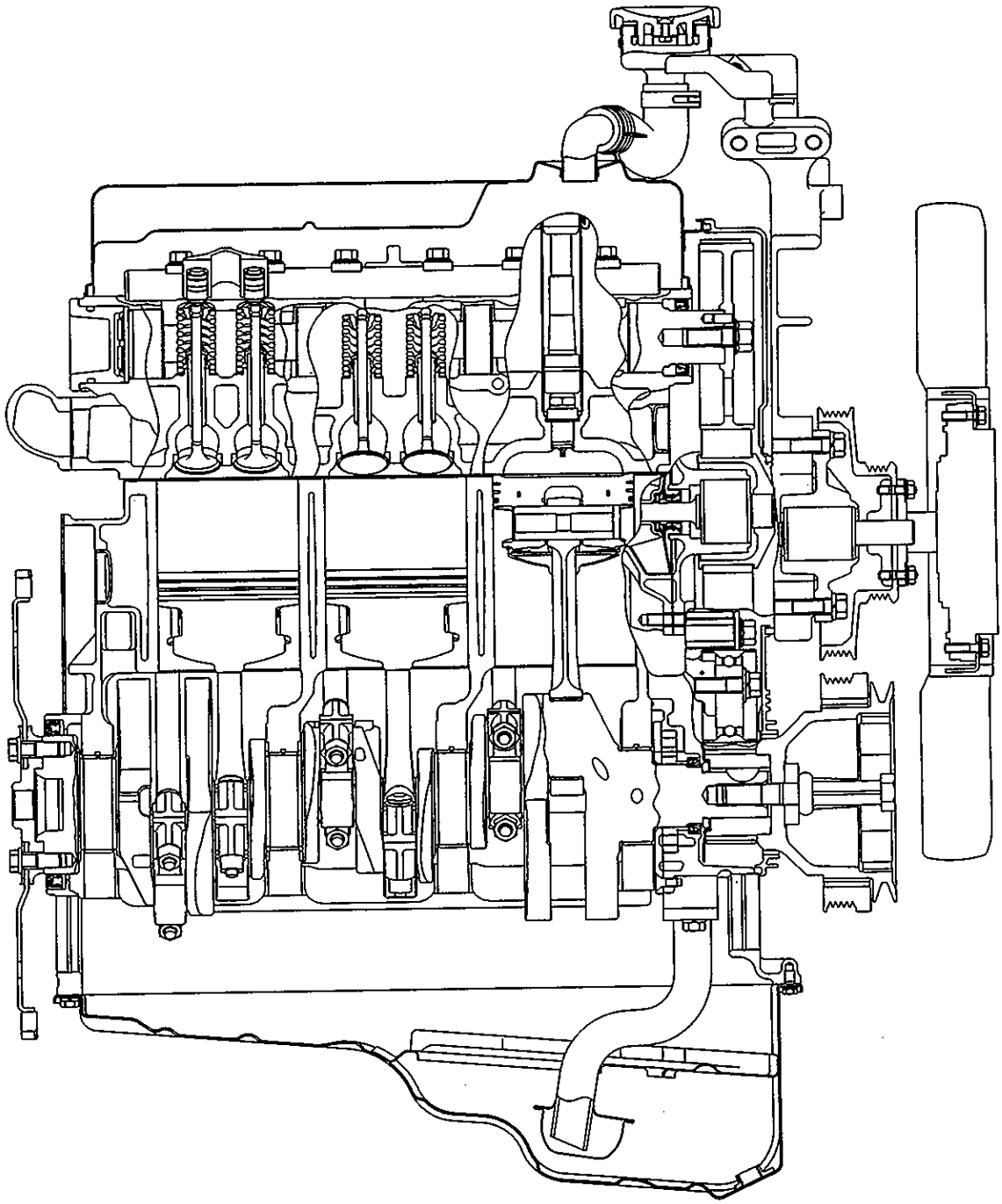

7EN0761

© Mitsubishi Motors Corporation Aug. 1994

Added

FOUR-CAMSHAFT ENGINE
(6G72 ENGINE WITHOUT TURBOCHARGER – UP TO 1992 MODELS)
(6G73 ENGINE)

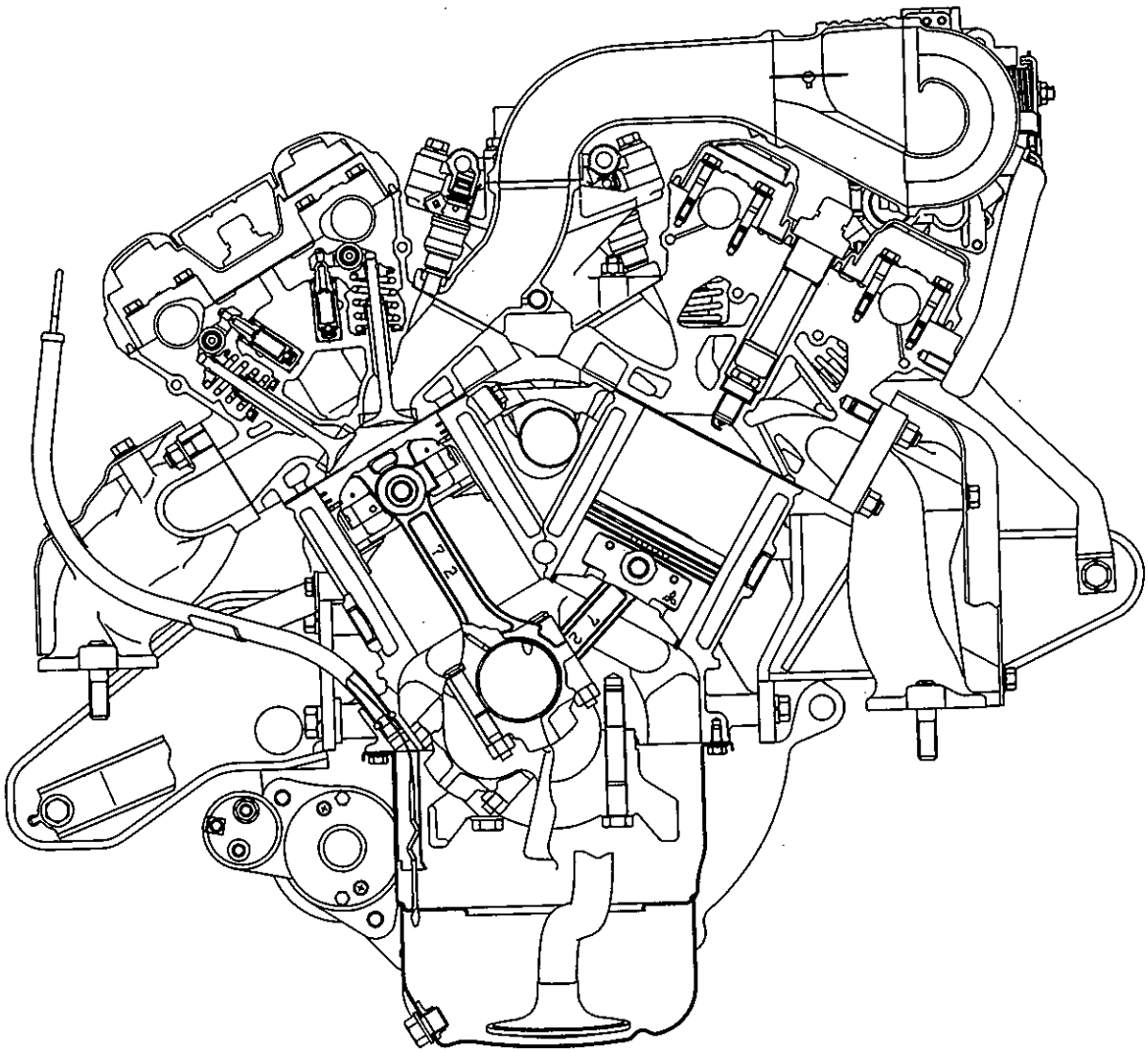

7EN0326

© Mitsubishi Motors Corporation Dec. 1993

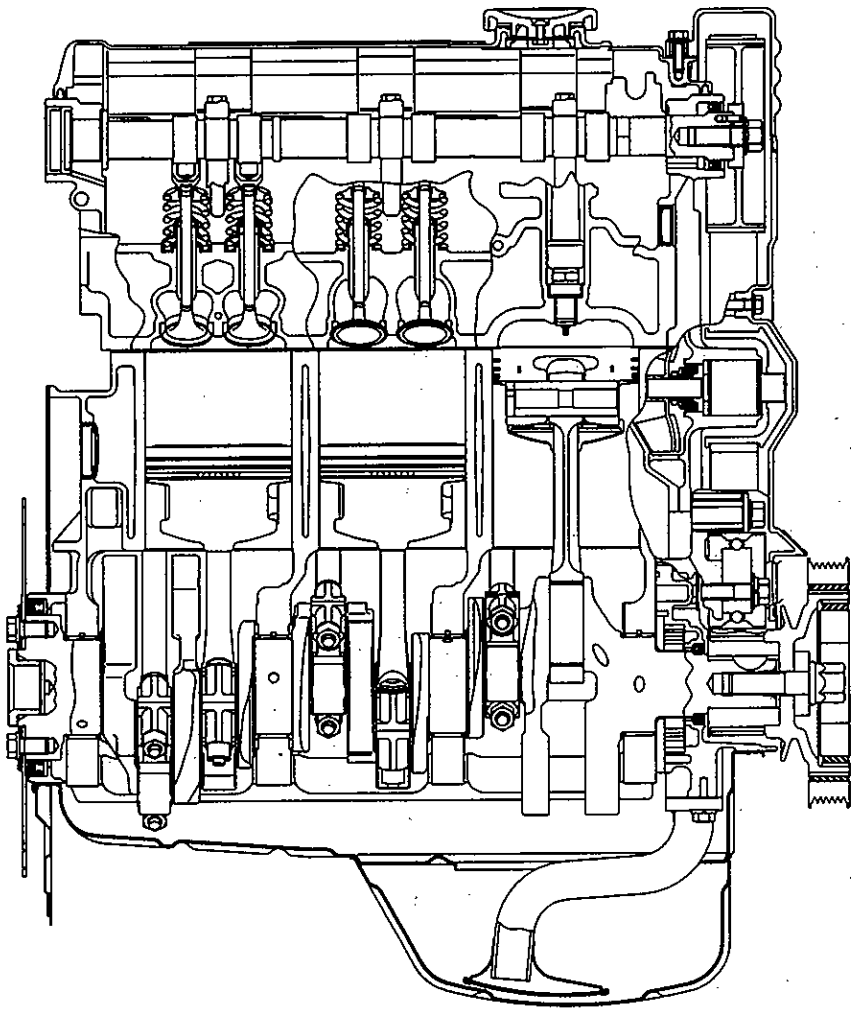

7EN0325

© Mitsubishi Motors Corporation Dec. 1993

FOUR-CAMSHAFT ENGINE
(WITHOUT TURBOCHARGER – FROM 1993 MODELS)

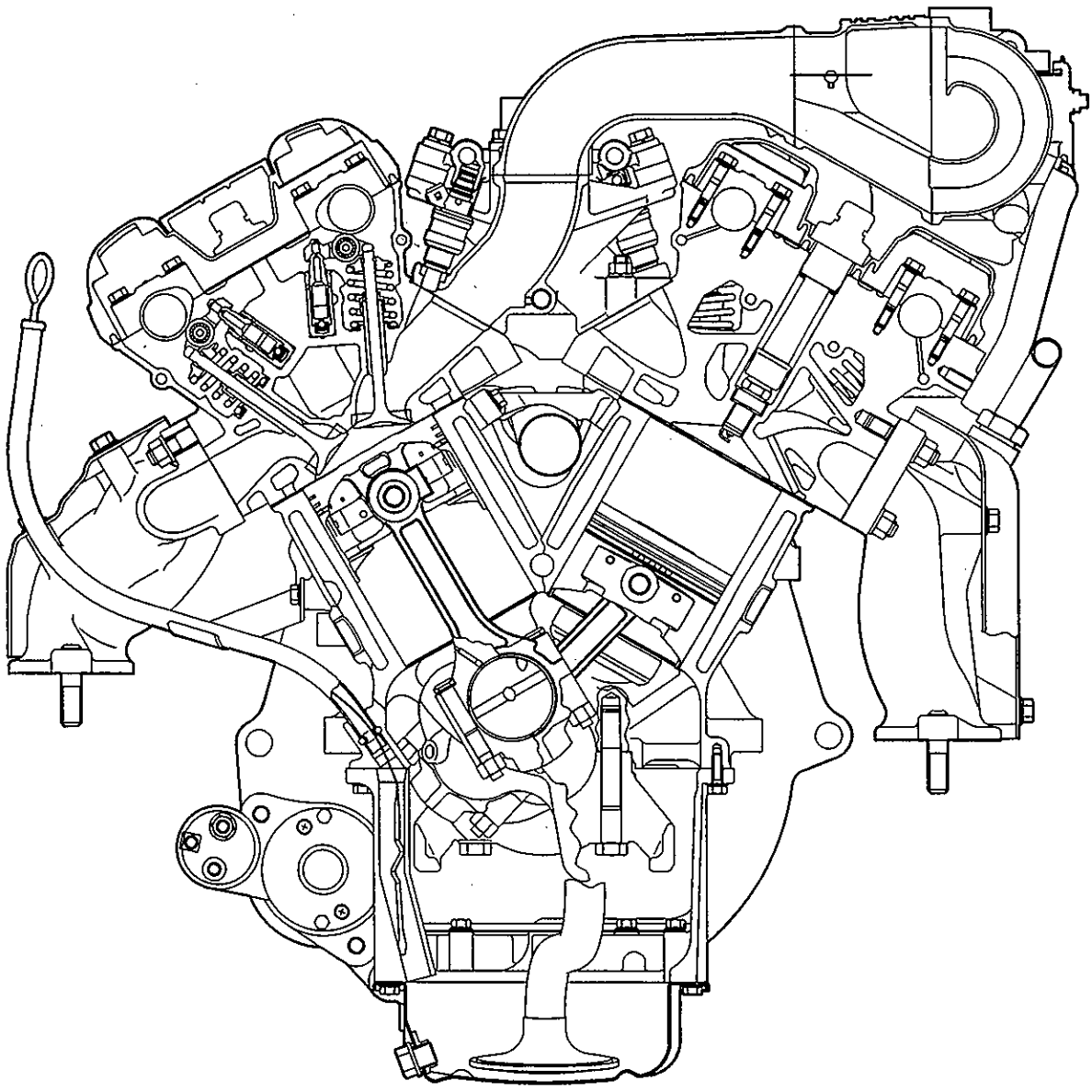

7EN0583

© Mitsubishi Motors Corporation Sept. 1992

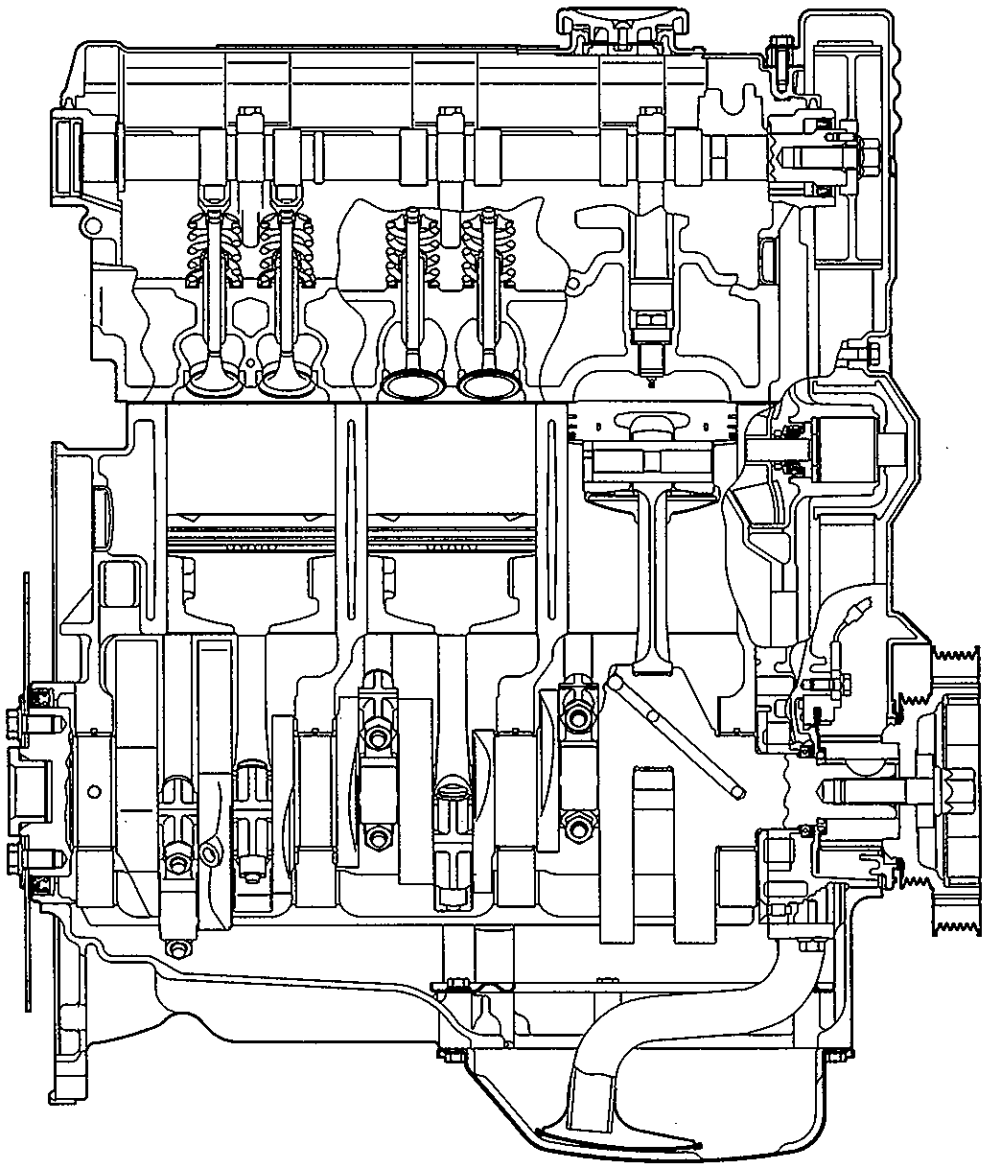

7EN0542

© Mitsubishi Motors Corporation Sept. 1992

FOUR-CAMSHAFT ENGINE (WITH TURBOCHARGER)

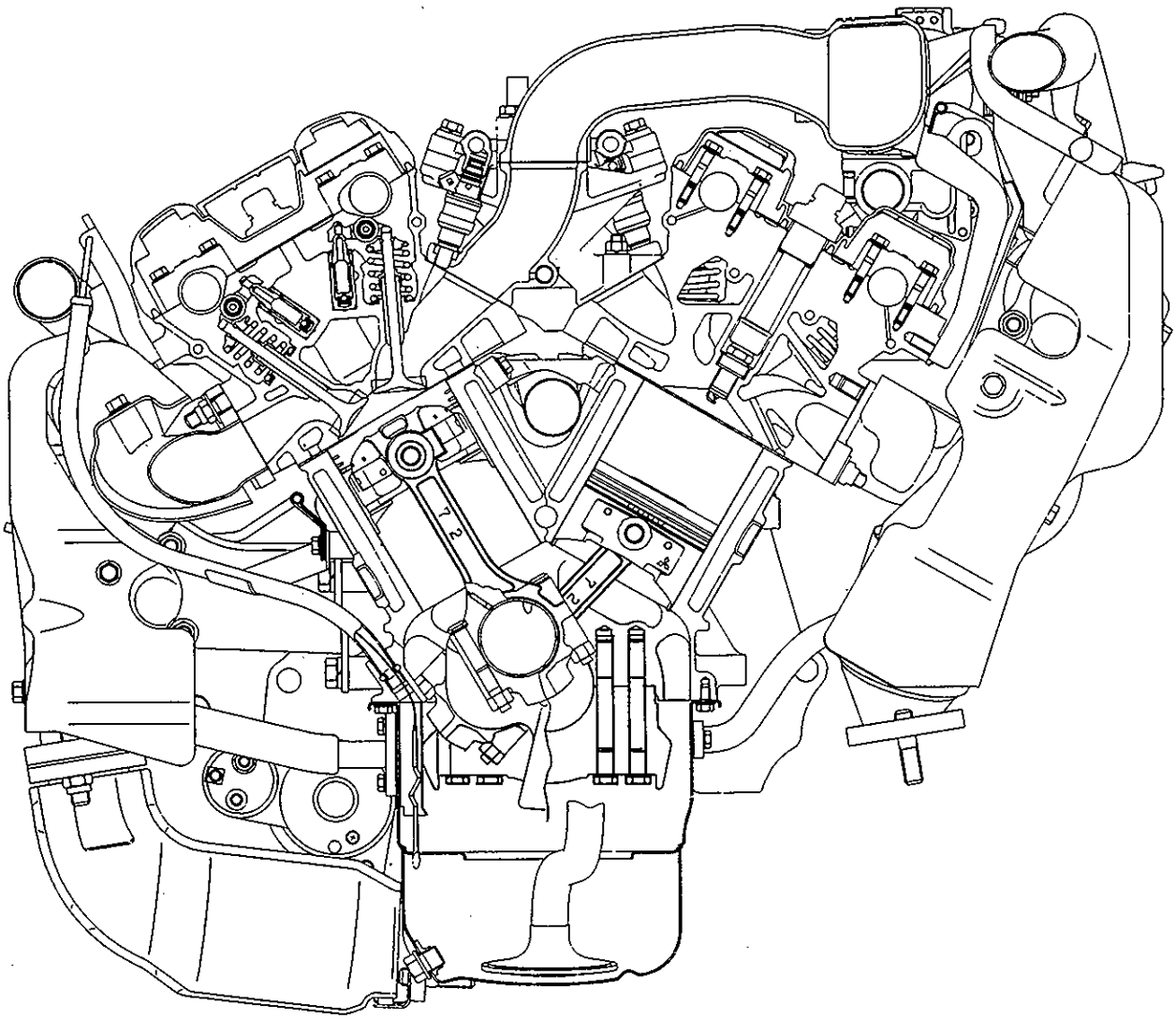

7EN0478

© Mitsubishi Motors Corporation Dec. 1993

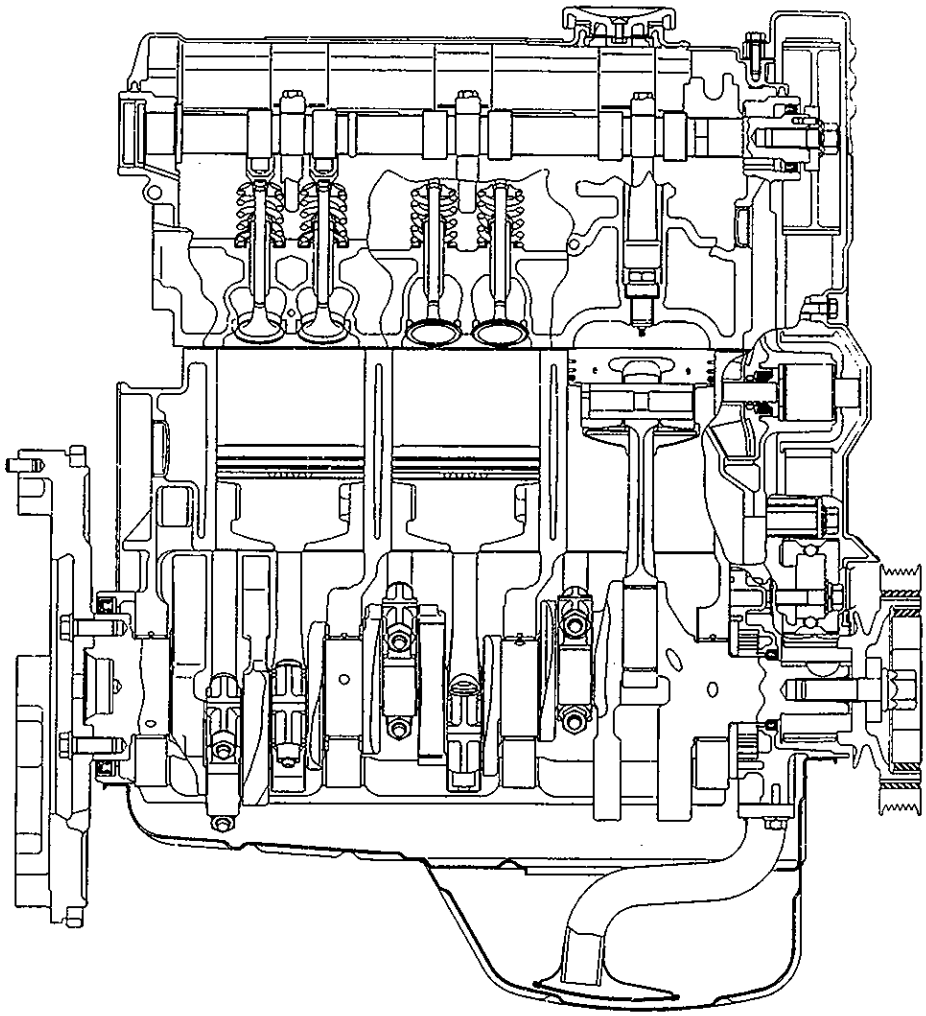

7EN0477

© Mitsubishi Motors Corporation Sept. 1992

FOUR-CAMSHAFT ENGINE FOR REAR WHEEL DRIVE VEHICLE

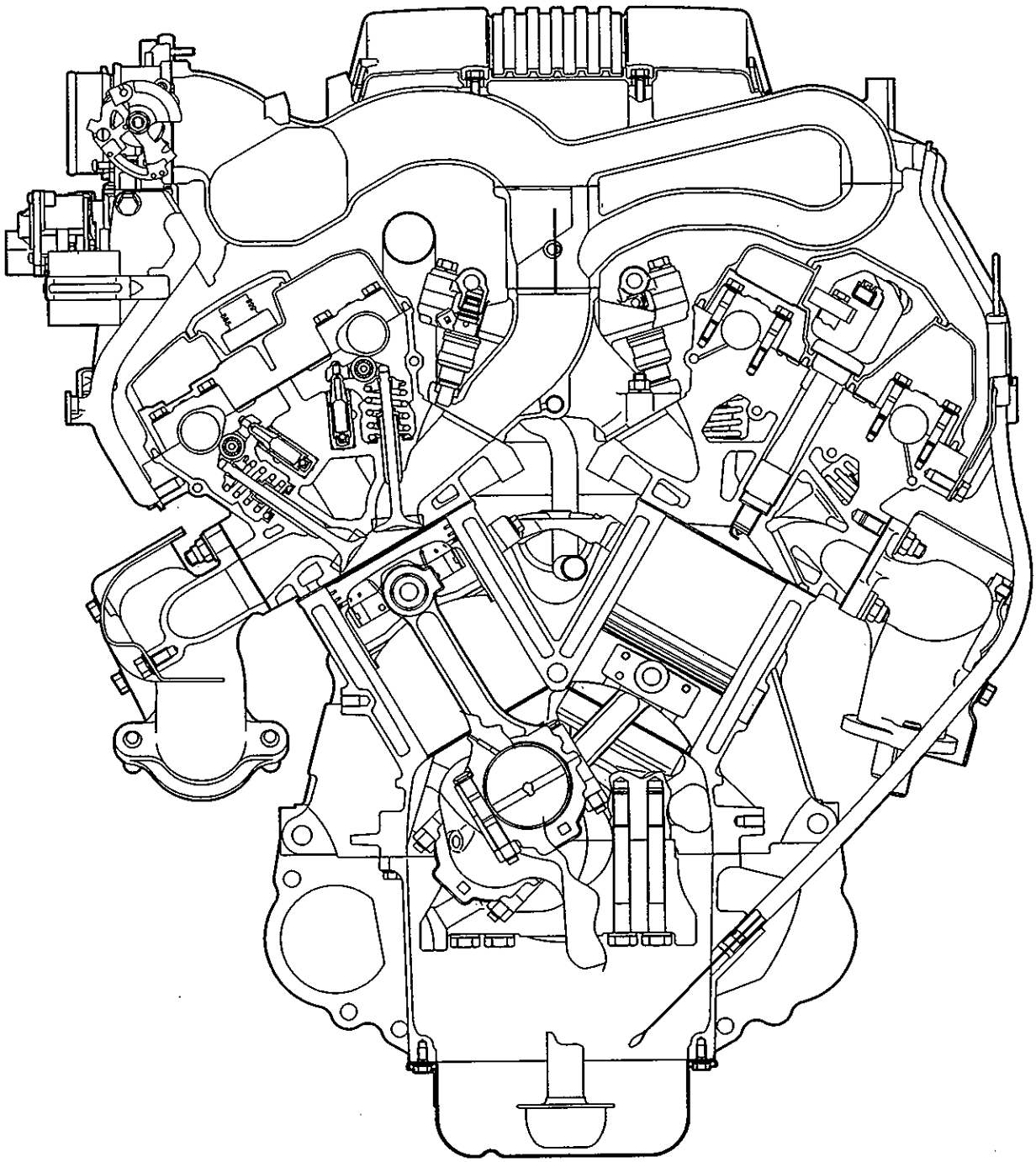

7EN0647

© Mitsubishi Motors Corporation Dec. 1993

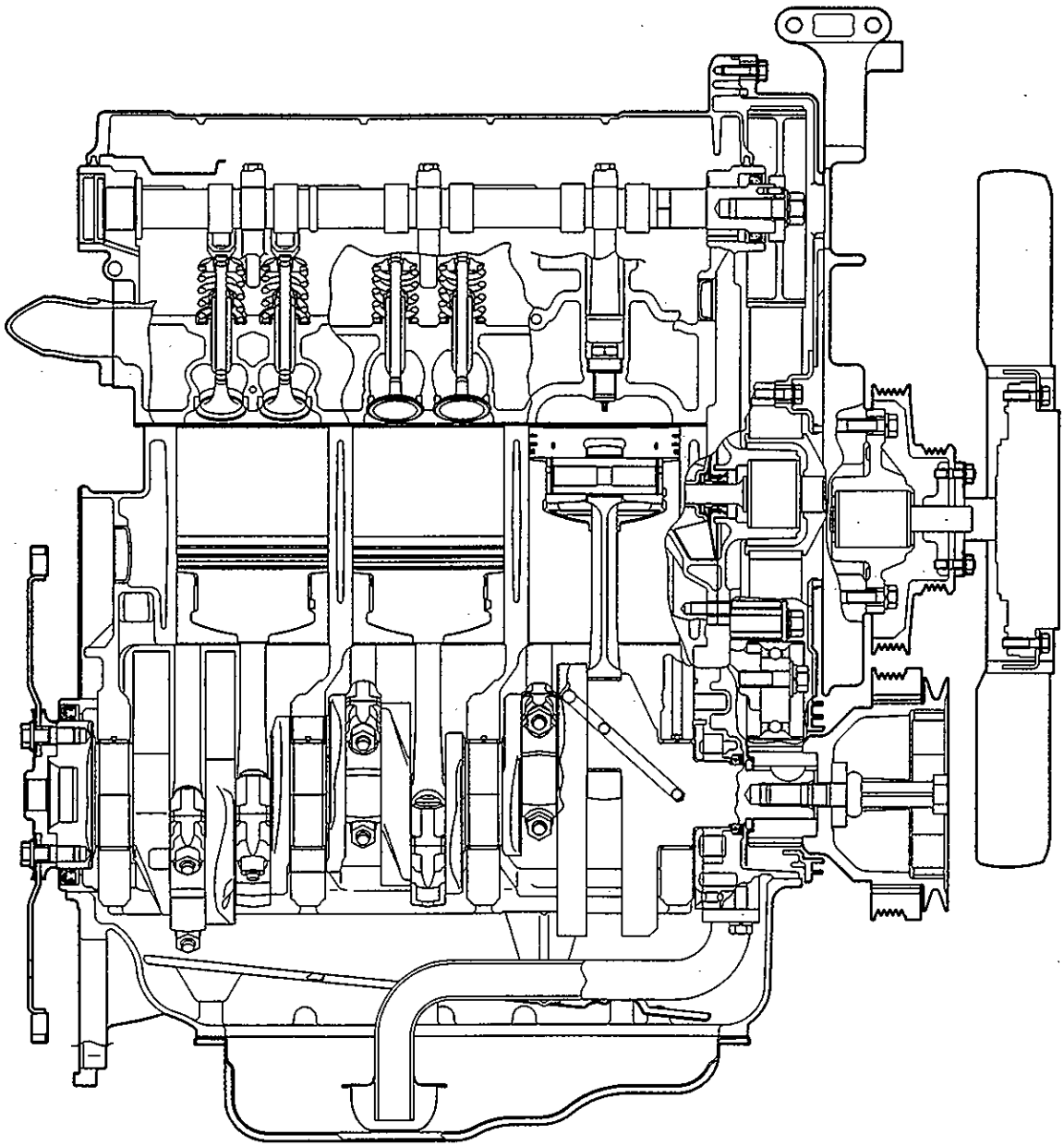

7EN0646

© Mitsubishi Motors Corporation Dec. 1993

LUBRICATION SYSTEM – TWO-CAMSHAFT ENGINE

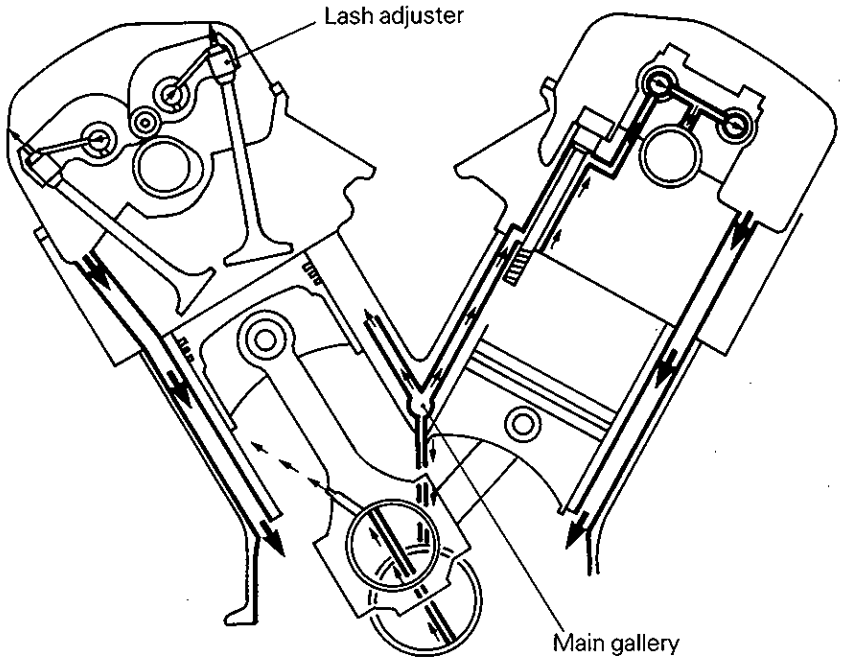

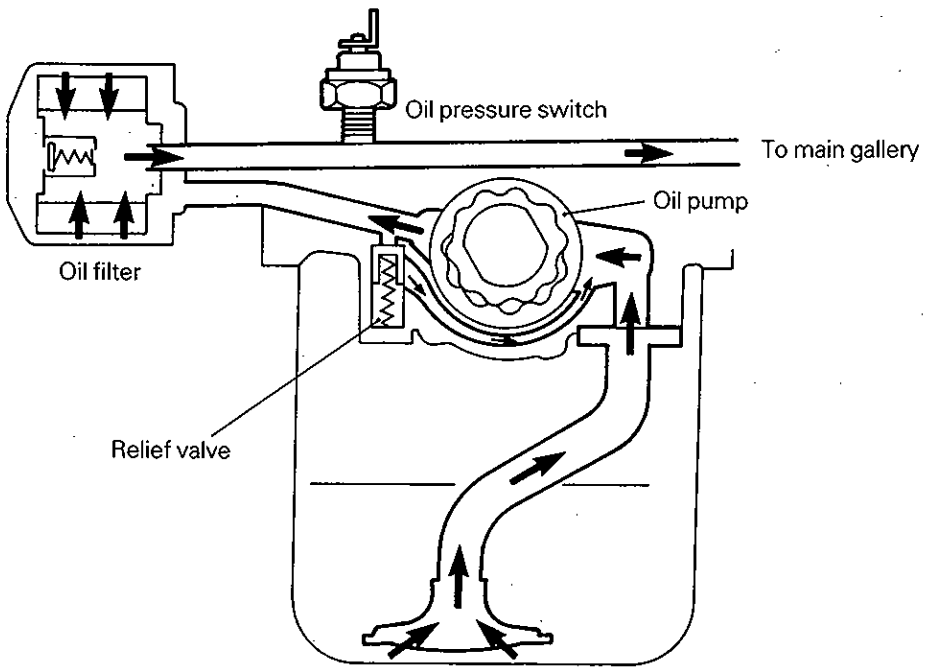

7LU0027

LUBRICATION SYSTEM – FOUR-CAMSHAFT ENGINE

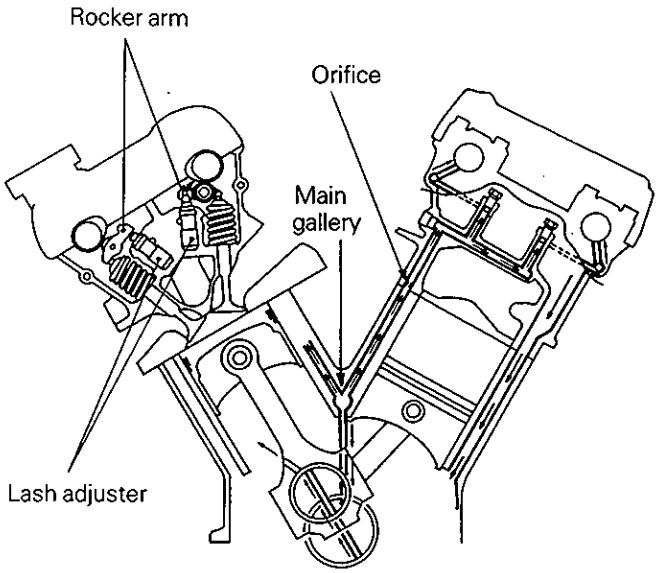

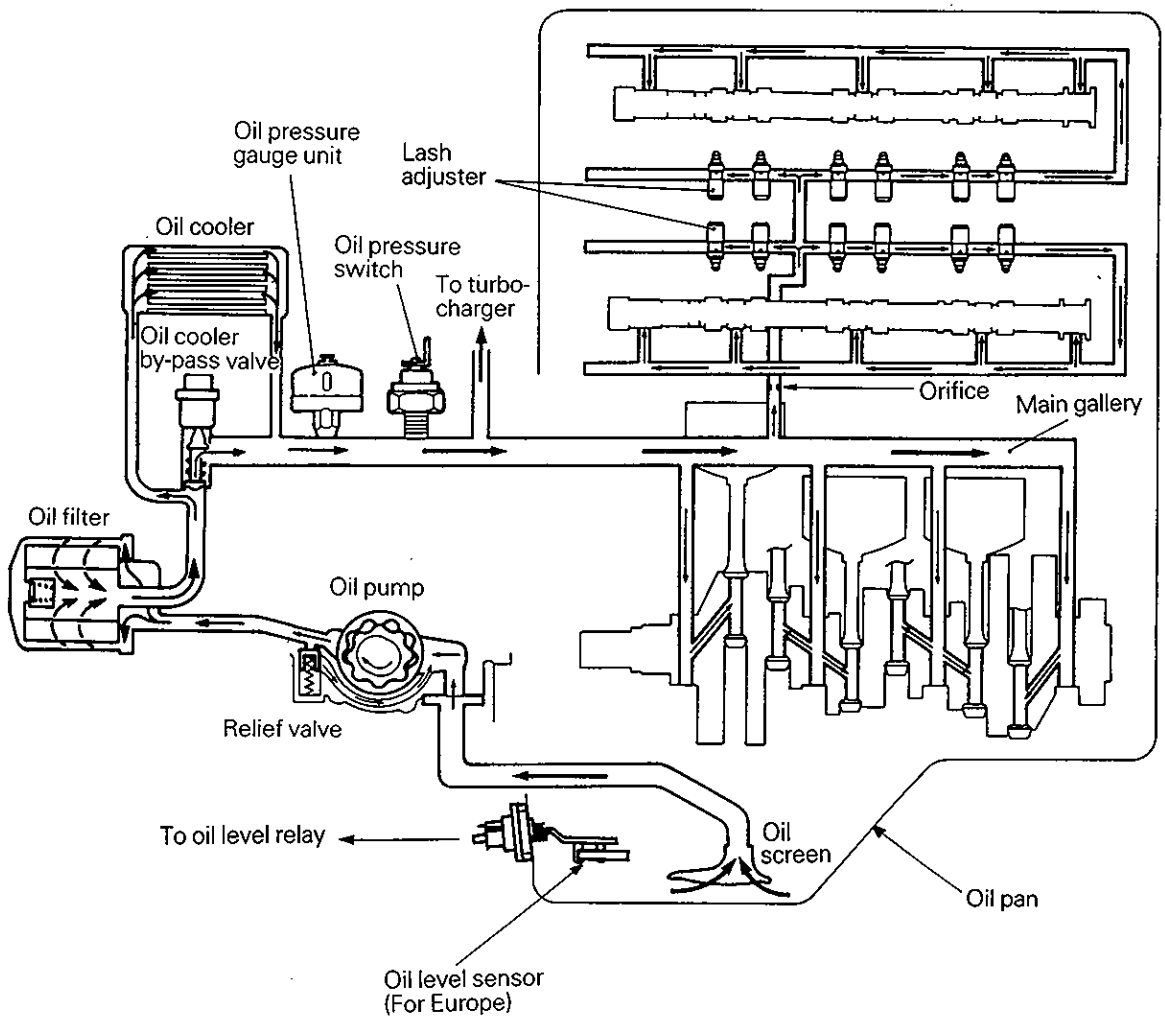

7EN0483

© Mitsubishi Motors Corporation Dec. 1993

1. SPECIFICATIONS

GENERAL SPECIFICATIONS

TWO-CAMSHAFT 12-VALVE ENGINE

Description	Specifications
No. and arrangement of cylinders	6, V-type
Combustion chamber	Compact type
Total displacement	2,972 cc (181.4 cu.in.)
Cylinder bore × stroke	91.1 × 76.0 mm (3.59 × 2.99 in.)
Compression ratio	
Front wheel drive vehicle	10.0
Rear wheel drive vehicle	8.9
Valve mechanism	Single overhead camshaft (per bank)
Lash adjuster	Hydraulic type
Rocker arm	Roller follower type
Valve timing: Front wheel drive vehicle	
Intake valve	
Opens	16° BTDC
Closes	66° ABDC
Exhaust valve	
Opens	56° BBDC
Closes	26° ATDC
Valve timing: Rear wheel drive vehicle	
Intake valve	
Opens	19° BTDC
Closes	59° ABDC
Exhaust valve	
Opens	59° BBDC
Closes	19° ATDC

TWO-CAMSHAFT 24-VALVE ENGINE – 6G72

Description	Specifications
No. and arrangement of cylinders	6, V-type
Combustion chamber	Compact type
Total displacement	2,972 cc (181.4 cu.in.)
Cylinder bore × stroke	91.1 × 76.0 mm (3.59 × 2.99 in.)
Compression ratio	9.0
Valve mechanism	Single overhead camshaft (per bank)
Lash adjuster	Hydraulic type
Rocker arm	Roller follower type
Valve timing	
Intake valve	
Opens	19° BTDC
Closes	45° ABDC
Exhaust valve	
Opens	49° BBDC
Closes	15° ATDC

© Mitsubishi Motors Corporation Aug. 1997

TWO-CAMSHAFT 24-VALVE ENGINE – 6G74

Description	Specifications
No. and arrangement of cylinders	6, V-type
Combustion chamber	Compact type
Total displacement	3,497 cc (213.4 cu.in.)
Cylinder bore × stroke	93.0 × 85.8 mm (3.66 × 3.37 in.)
Compression ratio	9.0
Valve mechanism	Single overhead camshaft (per bank)
Lash adjuster	Hydraulic type
Rocker arm	Roller follower type
Valve timing	
Intake valve	
Opens	13° BTDC
Closes	55° ABDC
Exhaust valve	
Opens	51° BBDC
Closes	17° ATDC

FOUR-CAMSHAFT ENGINE – 6G72

Description	Specifications
No. and arrangement of cylinders	6, V-type
Combustion chamber	Compact type
Total displacement	2,972 cc (181.4 cu.in.)
Cylinder bore × stroke	91.1 × 76.0 mm (3.59 × 2.99 in.)
Compression ratio	
Without turbocharger	10.0
With turbocharger	8.0
Valve mechanism	Double overhead camshaft (per bank)
Lash adjuster	Hydraulic type
Rocker arm	Roller follower type
Valve timing	
Without turbocharger	
Intake valve	
Opens	16.5° BTDC
Closes	55.5° ABDC
Exhaust valve	
Opens	48.5° BBDC
Closes	15.5° ATDC
With turbocharger	
Intake valve	
Opens	16.5° BTDC
Closes	55.5° ABDC
Exhaust valve	
Opens	50.5° BBDC
Closes	17.5° ATDC

© Mitsubishi Motors Corporation Aug. 1997

FOUR-CAMSHAFT ENGINE – 6G73

Description	Specifications
No. and arrangement of cylinders	6, V-type
Combustion chamber	Compact type
Total displacement	2,497 cc (152.4 cu.in.)
Cylinder bore × stroke	83.5 × 76.0 mm (3.29 × 2.99 in.)
Compression ratio	10.0
Valve mechanism	Double overhead camshaft (per bank)
Lash adjuster	Hydraulic type
Rocker arm	Roller follower type
Valve timing	
Intake valve	
Opens	14° BTDC
Closes	58° ABDC
Exhaust valve	
Opens	48.5° BBDC
Closes	15.5° ATDC

FOUR-CAMSHAFT ENGINE – 6G74

Description	Specifications
No. and arrangement of cylinders	6, V-type
Combustion chamber	Compact type
Total displacement	3,497 cc (213.4 cu.in.)
Cylinder bore × stroke	93 × 85.8 mm (3.66 × 3.37 in.)
Compression ratio	9.5
Valve mechanism	Double overhead camshaft (per bank)
Lash adjuster	Hydraulic type
Rocker arm	Roller follower type
Valve timing	
Intake valve	
Opens	11.5 BTDC
Closes	60.5 ABDC
Exhaust valve	
Opens	43.5 BBDC
Closes	20.5 ATDC

© Mitsubishi Motors Corporation Aug. 1997

SERVICE SPECIFICATIONS

mm (in.)

	Standard	Limit
Cylinder head – Two-camshaft engine		
Flatness of gasket surface		
12-valve engine	Less than 0.05 (0.0019)	0.2 (0.008)
24-valve engine	Less than 0.03 (0.0012)	0.2 (0.008)
Grinding limit		*0.2 (0.008)
* If cylinder block gasket surface has already been ground, thickness of the removed stock should be included in the grinding limit of –0.2 mm (–0.008 in.)		
Flatness of manifold mounting surface		
Intake side	Less than 0.10 (0.0039)	0.2 (0.008)
Exhaust side	Less than 0.15 (0.0059)	0.3 (0.012)
Overall height		
12-valve engine	84 (3.31)	
24-valve engine	120 (4.72)	
Oversize rework dimensions of valve guide hole (both intake and exhaust)		
12-valve engine		
0.05	13.05 – 13.07 (0.5138 – 0.5147)	
0.25	13.25 – 13.27 (0.5217 – 0.5224)	
0.50	13.50 – 13.52 (0.5315 – 0.5323)	
24-valve engine		
0.05	11.05 – 11.07 (0.4350 – 0.4358)	
0.25	11.25 – 11.27 (0.4429 – 0.4437)	
0.50	11.50 – 11.52 (0.4528 – 0.4535)	
Oversize rework dimension of valve seat hole		
12-valve engine		
Intake 0.3	44.30 – 44.33 (1.7441 – 1.7453)	
0.6	44.60 – 44.63 (1.7559 – 1.7571)	
Exhaust 0.3	38.30 – 38.33 (1.5079 – 1.5091)	
0.6	38.60 – 38.63 (1.5197 – 1.5209)	
24-valve engine		
Intake 0.3	34.30 – 34.33 (1.3503 – 1.3516)	
0.6	34.60 – 34.63 (1.3622 – 1.3634)	
Exhaust 0.3	31.80 – 31.83 (1.2520 – 1.2531)	
0.6	32.10 – 32.13 (1.2638 – 1.2650)	
Cylinder head – Four-camshaft engine		
Flatness of gasket surface	Less than 0.03 (0.0012)	0.2 (0.008)
Grinding limit		*0.2 (0.008)
* If cylinder block gasket surface has already been ground, thickness of the removed stock should be included in the grinding limit of –0.2 mm (–0.008 in.)		
Flatness of manifold mounting surface		
Intake side	Less than 0.10 (0.0039)	0.2 (0.008)
Exhaust side	Less than 0.15 (0.0059)	0.3 (0.012)
Overall height	132 (5.20)	
Oversize rework dimensions of valve guide hole (both intake and exhaust)		
0.05	12.05 – 12.07 (0.4744 – 0.4752)	
0.25	12.25 – 12.27 (0.4823 – 0.4831)	
0.50	12.50 – 12.52 (0.4921 – 0.4929)	

mm (in.)

		Standard	Limit
Oversize rework dimension of valve seat hole			
6G72, 6G74			
Intake	0.3	36.30 – 36.33 (1.4291 – 1.4303)	
	0.6	36.60 – 36.63 (1.4409 – 1.4421)	
Exhaust	0.3	33.30 – 33.33 (1.3110 – 1.3122)	
	0.6	33.60 – 33.63 (1.3228 – 1.3240)	
6G73			
Intake	0.3	34.30 – 34.33 (1.3504 – 1.3516)	
	0.6	34.60 – 34.63 (1.3622 – 1.3634)	
Exhaust	0.3	30.80 – 30.83 (1.2126 – 1.2138)	
	0.6	31.10 – 31.13 (1.2244 – 1.2256)	
Camshaft – Two-camshaft engine			
Cam height			
12-valve engine			
Intake		41.25 (1.6240)	40.75 (1.6043)
Exhaust		41.25 (1.6240)	40.75 (1.6043)
24-valve engine (6G72)			
Intake		37.58 (1.4795)	37.08 (1.4598)
Exhaust		36.95 (1.4547)	36.45 (1.4350)
24-valve engine (6G74)			
Intake <Except 2001 model PAJERO>		37.71 (1.4846)	37.21 (1.4650)
<2001 model PAJERO>		37.39 (1.4720)	36.89 (1.4524)
Exhaust		37.14 (1.4622)	36.64 (1.4425)
Journal diameter			
12-valve engine		34 (1.34)	
24-valve engine		45 (1.77)	
Oil clearance			
12-valve engine		0.05 – 0.09 (0.0020 – 0.0035)	
24-valve engine		0.06 – 0.10 (0.0024 – 0.0039)	
Camshaft – Four-camshaft engine			
Cam height			
6G72			
Intake		35.49 (1.3972)*1	34.99 (1.3776)*1
		34.91 (1.3744)*2	34.41 (1.3547)*2
Exhaust		35.20 (1.3858)*1	34.70 (1.3661)*1
		34.91 (1.3744)*2	34.41 (1.3547)*2
6G73			
Intake		34.91 (1.3744)	34.41 (1.3547)
Exhaust		34.91 (1.3744)	34.41 (1.3547)
6G74			
Intake		35.20 (1.3858)	34.70 (1.3661)
Exhaust		34.91 (1.3744)	34.41 (1.3547)
Journal diameter		26 (1.02)	
Oil clearance		0.05 – 0.09 (0.020 – 0.0035)	

NOTE:
*1: SIGMA up to 1992 models; 3000GT for Europe and General Export
*2: SIGMA after 1993 models; 3000GT for Australia

© Mitsubishi Motors Corporation Mar. 2000

mm (in.)

	Standard	Limit
Rocker arm – Two-camshaft engine		
I.D.		
12-valve engine	18.91 – 18.93 (0.7445 – 0.7453)	
24-valve engine	20.02 – 20.04 (0.7882 – 0.7890)	
Rocker arm-to-shaft clearance		
12-valve engine	0.01 – 0.04 (0.0004 – 0.0016)	
24-valve engine	0.02 – 0.05 (0.0008 – 0.0020)	
Rocker shaft – Two-camshaft engine		
O.D.		
12-valve engine	18.89 – 18.90 (0.7437 – 0.7441)	
24-valve engine	19.99 – 20.00 (0.7870 – 0.7874)	
Overall length		
12-valve engine	333.5 (13.130)	
24-valve engine	344.0 (13.543)	
Valve – Two-camshaft engine		
Overall length		
12-valve engine		
Intake	102.97 (4.0539)	102.47 (4.0342)
Exhaust	102.67 (4.0421)	102.17 (4.0224)
24-valve engine		
Intake	112.30 (4.4213)	111.80 (4.4016)
Exhaust	114.11 (4.4925)	113.61 (4.4728)
Stem diameter		
12-valve engine		
Intake	7.96 – 7.98 (0.3134 – 0.3142)	
Exhaust	7.93 – 7.95 (0.3122 – 0.3130)	
24-valve engine		
Intake	5.97 – 5.98 (0.2350 – 0.2354)	
Exhaust	5.95 – 5.97 (0.2343 – 0.2350)	
Face angle	45° – 45.5°	
Stem-to-guide clearance		
12-valve engine		
Intake	0.02 – 0.06 (0.0008 – 0.0024)	0.10 (0.0039)
Exhaust	0.05 – 0.09 (0.0020 – 0.0035)	0.15 (0.0059)
24-valve engine		
Intake	0.02 – 0.04 (0.0008 – 0.0016)	0.10 (0.0039)
Exhaust	0.03 – 0.06 (0.0012 – 0.0024)	0.15 (0.0059)
Thickness of valve head (Margin)		
12-valve engine		
Intake	1.2 (0.047)	0.7 (0.028)
Exhaust	2.0 (0.079)	1.5 (0.059)
24-valve engine		
Intake	1.0 (0.039)	0.5 (0.020)
Exhaust	1.2 (0.047)	0.7 (0.028)

© Mitsubishi Motors Corporation Nov. 1995

mm (in.)

	Standard	Limit
Valve – Four-camshaft engine		
Overall length		
6G72, 6G74 <Except GDI>		
Intake	106.28 (4.1842)	105.78 (4.1646)
Exhaust	105.40 (4.1496)	104.90 (4.1299)
6G73		
Intake	107.28 (4.2236)	106.78 (4.2039)
Exhaust	106.10 (4.1776)	105.60 (4.1575)
6G74-GDI		
Intake	102.28 (4.0268)	101.78 (4.0071)
Exhaust	101.40 (3.9921)	100.90 (3.9724)
Stem diameter		
Intake	6.57 – 6.58 (0.2587 – 0.2591)	
Exhaust	6.53 – 6.55 (0.2571 – 0.2579)	
Face angle	45° – 45.5°	
Stem-to-guide clearance		
Intake	0.02 – 0.05 (0.0008 – 0.0020)	0.10 (0.0039)
Exhaust	0.05 – 0.09 (0.0020 – 0.0035)	0.15 (0.0059)
Thickness of valve head (Margin)		
Intake	1.0 (0.039)	0.7 (0.028)
Exhaust	1.5 (0.059)	1.0 (0.039)
Valve spring – Two-camshaft engine		
Free length		
12-valve engine	49.8 (1.961)	48.8 (1.921)
24-valve engine	51.0 (2.008)	50.0 (1.969)
Load		
12-valve engine	329 N (32.9 kg, 72.5 lbs.) at installed height	
24-valve engine	267 N (26.7 kg, 58.9 lbs.) at installed height	
Installed height		
12-valve engine	40.4 (1.591)	41.4 (1.630)
24-valve engine	27.2 (1.071)	28.2 (1.110)
Out-of-squareness	Less than 2°	4°
Valve spring – Four-camshaft engine		
Free length		
6G72	46.9 (1.846)*1	45.9 (1.807)
	46.4 (1.827)*2	45.4 (1.787)
6G73, 6G74	46.4 (1.827)	45.4 (1.787)
Load		
6G72	280 N (28.0 kg, 61.7 lbs.) at installed height*1	
	240 N (24.0 kg, 52.9 lbs.) at installed height*2	
6G73, 6G74	240 N (24.0 kg, 52.9 lbs.) at installed height	

NOTE
O.D. = Outer Diameter
I.D. = Inner Diameter

*1: SIGMA up to 1992 models; 3000GT for Europe and General Export
*2: SIGMA after 1993 models; 3000GT for Australia

© Mitsubishi Motors Corporation Mar. 2000

mm (in.)

	Standard	Limit
Installed height	37.9 (1.492)	38.9 (1.531)
Out-of-squareness	Less than 2°	4°
Valve guide – Two-camshaft engine		
Overall length		
12-valve engine		
Intake	44 (1.73)	
Exhaust	48 (1.89)	
24-valve engine		
Intake	45.5 (1.79)	
Exhaust	50.5 (1.99)	
I.D.		
12-valve engine	8.00 – 8.02 (0.315 – 0.316)	
24-valve engine	6.00 – 6.01 (0.236 – 0.237)	
O.D.		
12-valve engine	13.06 – 13.07 (0.5142 – 0.5146)	
24-valve engine	11.06 – 11.07 (0.4354 – 0.4358)	
Service size	0.05, 0.25, 0.50 Oversize	
Valve guide – Four-camshaft engine		
Overall length		
Intake	45.5 (1.791)	
Exhaust	50.5 (1.988)	
I.D.	6.60 – 6.62 (0.2598 – 0.2607)	
O.D	12.06 – 12.07 (0.4748 – 0.4752)	
Service size	0.05, 0.25, 0.50 Oversize	
Valve seat		
Valve stem projection		
Two-camshaft engine		
12-valve engine	41.65 (1.6398)	42.15 (1.6594)
24-valve engine	49.30 (1.9409)	49.80 (1.9606)
Four-camshaft engine		
Intake	47.10 (1.8543)	47.60 (1.8740)
Exhaust	46.60 (1.8346)	47.10 (1.8543)
Seat angle	44 – 44.5°	
Valve contact width	0.9 – 1.3 (0.035 – 0.051)	
Service size	0.30, 0.60 Oversize	
Piston		
O.D.		
6G72	91.1 (3.587)	
6G73	83.5 (3.287)	
6G74	93.0 (3.661)	
Piston-to-cylinder clearance		
6G72, 6G74	0.03 – 0.05 (0.0012 – 0.0020)	
6G73, 6G72 – Two-camshaft 24-valve engine	0.02 – 0.04 (0.0008 – 0.0016)	

NOTE
O.D. = Outer Diameter
I.D. = Inner Diameter

© Mitsubishi Motors Corporation Mar. 2000

mm (in.)

	Standard	Limit
Ring groove width		
No. 1 ring		
6G72	1.21 – 1.23 (0.0474 – 0.0484)	
Rear wheel drive vehicle*1	1.51 – 1.53 (0.0594 – 0.0602)	
6G73	1.22 – 1.24 (0.0480 – 0.0488)	
6G74	1.52 – 1.54 (0.0598 – 0.0606)	
No. 2 ring	1.51 – 1.53 (0.0594 – 0.0602)	
Oil ring		
6G72	3.01 – 3.04 (0.1185 – 0.1197)	
Rear wheel drive vehicle*1	4.01 – 4.04 (0.1579 – 0.1591)	
6G73, 6G74	3.01 – 3.04 (0.1185 – 0.1197)	
Service size	0.25*2, 0.50, 0.75*2, 1.00 Oversize	
Piston ring		
End gap		
No. 1 ring		
6G72, 6G74	0.30 – 0.45 (0.0118 – 0.0177)	0.8 (0.031)
6G73	0.25 – 0.40 (0.0098 – 0.0157)	0.8 (0.031)
No. 2 ring		
6G72, 6G74	0.45 – 0.60 (0.0177 – 0.0236)	0.8 (0.031)
Rear wheel drive vehicle*1	0.25 – 0.45 (0.0098 – 0.0177)	0.8 (0.031)
6G73	0.40 – 0.55 (0.0157 – 0.0217)	0.8 (0.031)
Oil ring		
6G72	0.20 – 0.60 (0.0079 – 0.0236)	1.0 (0.039)
Rear wheel drive vehicle*1	0.20 – 0.70 (0.0079 – 0.0276)	1.0 (0.039)
6G73	0.20 – 0.60 (0.0079 – 0.0236)	1.0 (0.039)
6G74	0.10 – 0.35 (0.0039 – 0.0138)	1.0 (0.039)
Ring to ring groove clearance		
No. 1		
6G72, 6G74	0.03 – 0.07 (0.0012 – 0.0026)	0.1 (0.004)
Rear wheel drive vehicle*1	0.03 – 0.09 (0.0012 – 0.0035)	0.1 (0.004)
6G73	0.03 – 0.07 (0.0012 – 0.0026)	0.1 (0.004)
No. 2	0.02 – 0.06 (0.0008 – 0.0024)	0.1 (0.004)
Piston pin		
O.D.	22.001 – 22.007 (0.8662 – 0.8664)	
Press-in load	7,500 – 17,500 N (750 – 1,750 kg, 1,653 – 3,858 lbs.)	
Press-in temperature	Room temperature	
Connecting rod		
Big end center-to-small end center length	140.9 – 141.0 (5.547 – 5.551)	
Bend	0.05 (0.0020) or less	
Twist	0.1 (0.004) or less	
Big end side clearance	0.10 – 0.25 (0.0039 – 0.0098)	0.4 (0.016)

NOTE

*1: Fabricated up to Nov. 1992

*2: Up to 1993 models

© Mitsubishi Motors Corporation Nov. 1995

mm (in.)

	Standard	Limit
Crankshaft		
End play <Except GDI>	0.05 – 0.25 (0.0020 – 0.0098)	0.3 (0.012)
<GDI>	0.05 – 0.25 (0.0020 – 0.0098)	0.4 (0.016)
Journal O.D.		
6G72, 6G73	60 (2.36)	
6G74	64 (2.52)	
Pin O.D.		
6G72, 6G73	50 (1.97)	
6G74	55 (2.17)	
Out-of-roundness of journal and pin		
Two-camshaft engine	Less than 0.005 (0.0002)	
Four-camshaft engine	Less than 0.003 (0.0001)	
Taper of journal and pin	Less than 0.005 (0.0002)	
Oil clearance of journal <Except GDI>	0.02 – 0.05 (0.0008 – 0.0020)	0.1 (0.004)
<GDI>	0.02 – 0.04 (0.0008 – 0.0016)	0.1 (0.004)
Oil clearance of pin		
6G72, 6G73	0.02 – 0.05 (0.0008 – 0.0020)	0.1 (0.004)
6G74	0.03 – 0.05 (0.0012 – 0.0020)	0.1 (0.004)
Cylinder block		
Cylinder bore		
6G72	91.1 (3.587)	
6G73	83.5 (3.287)	
6G74	93.0 (3.661)	
Flatness of gasket surface	Less than 0.05 (0.0020)	
Grinding limit		*0.2 (0.008)
* If cylinder head gasket surface has already been ground, thickness of the removed stock should be included in the grinding limit of 0.2 mm (0.008 in.).		
Flywheel		
Runout		0.13 (0.0051)
Oil pump		
Tip clearance	0.06 – 0.18 (0.0024 – 0.0070)	
Side clearance	0.04 – 0.10 (0.0016 – 0.0039)	
Body clearance	0.10 – 0.18 (0.0040 – 0.0070)	0.35 (0.0138)
Drive belt – Two-camshaft engine		
Deflection		
New belt		
12-valve engine		
Front wheel drive vehicle	4.0 – 5.0 (0.157 – 0.197)	
Rear wheel drive vehicle	6.5 – 8.0 (0.256 – 0.315)	
24-valve engine		
Between cooling fan pulley and crankshaft pulley	4.0 – 5.0 (0.157 – 0.197)	
Between cooling fan pulley and alternator	5.5 – 7.5 (0.217 – 0.295)	

mm (in.)

	Standard	Limit
Used belt		
12-valve engine		
Front wheel drive vehicle	7.0 (0.276)	
Rear wheel drive vehicle	9.0 (0.354)	
24-valve engine		
Between cooling fan pulley and crankshaft pulley	5.5 – 6.5 (0.217 – 0.256)	
Between cooling fan pulley and alternator	8.0 – 9.0 (0.315 – 0.354)	
Tension		
New belt		
12-valve engine		
Front wheel drive vehicle	700 – 900 N (70 – 90 kg, 154 – 198 lbs.)	
Rear wheel drive vehicle	500 – 700 N (50 – 70 kg, 110 – 154 lbs.)	
24-valve engine	637 – 833 N (65 – 85 kg, 143 – 187 lbs.)	
Used belt		
12-valve engine		
Front wheel drive vehicle	500 N (50 kg, 110 lbs.)	
Rear wheel drive vehicle	400 N (40 kg, 88 lbs.)	
24-valve engine	441 – 539 N (45 – 55 kg, 99 – 121 lbs.)	
Drive belt – Four-camshaft engine		
Deflection		
New belt		
Front wheel drive vehicle	3.5 – 4.0 (0.138 – 0.157)	
Rear wheel drive vehicle		
Between cooling fan pulley and crankshaft pulley	4.0 – 5.0 (0.157 – 0.197)	
Between cooling fan pulley and alternator	5.5 – 7.5 (0.217 – 0.295)	
Used belt		
Front wheel drive vehicle	4.0 – 5.0 (0.157 – 0.197)	
Rear wheel drive vehicle		
Between cooling fan pulley and crankshaft pulley	5.5 – 6.5 (0.217 – 0.256)	
Between cooling fan pulley and alternator	8.0 – 9.0 (0.315 – 0.354)	
Tension		
New belt		
Front wheel drive vehicle	650 – 850 N (65 – 85 kg, 143 – 187 lbs.)	
Rear wheel drive vehicle	637 – 833 N (65 – 85 kg, 143 – 187 lbs.)	
Used belt		
Front wheel drive vehicle	450 – 500 N (45 – 50 kg, 99 – 110 lbs.)	
Rear wheel drive vehicle	441 – 539 N (45 – 55 kg, 99 – 121 lbs.)	

© Mitsubishi Motors Corporation Aug. 1994

mm (in.)

	Standard	Limit
Thermostat		
SIGMA – SOHC <except models for GCC>		
Valve opening temperature	88°C (190°F)	
Fully opening temperature	100°C (212°F)	
Lift	8 (0.32) or more	
SIGMA – SOHC <models for GCC> and PAJERO/MONTERO – SOHC		
Valve opening temperature	82°C (180°F)	
Fully opening temperature	95°C (203°F)	
Lift	8 (0.32) or more	
SIGMA – DOHC		
Valve opening temperature	82°C (180°F)	
Fully opening temperature	95°C (203°F)	
Lift	10 (0.39) or more	
3000GT		
Valve opening temperature	76.5°C (170°F)	
Fully opening temperature	90°C (194°F)	
Lift	10 (0.39) or more	
GALANT		
Valve opening temperature	82°C (180°F)	
Fully opening temperature	95°C (203°F)	
Lift	10 (0.39) or more	
PAJERO/MONTERO <models for Europe and Australia>		
Valve opening temperature	82°C (180°F)	
Fully opening temperature	95°C (203°F)	
Lift	10 (0.39) or more	
PAJERO/MONTERO <models for General Export and GCC>		
Valve opening temperature	76.5°C (170°F)	
Fully opening temperature	90°C (194°F)	
Lift	10 (0.39) or more	
PAJERO SPORT/CHALLENGER and L200		
Valve opening temperature	88°C (190°F)	
Fully opening temperature	100°C (212°F)	
Lift	10 (0.39) or more	
L400		
Valve opening temperature	82°C (180°F)	
Fully opening temperature	95°C (203°F)	
Lift	10 (0.39) or more	
Coolant temperature gauge unit		
Resistance	Approx. 230 Ω / 50°C (122°F) 90.5 – 117.5 Ω / 70°C (158°F)	
Coolant temperature sensor		
Resistance	5.9 kΩ / 0°C (32°F) 2.5 kΩ / 20°C (68°F) 1.1 kΩ / 40°C (104°F) 0.3 kΩ / 80°C (176°F)	
Thermo switch		
Continuity temperature	50°C (122°F) or higher	

© Mitsubishi Motors Corporation May 1999

TORQUE SPECIFICATIONS

		Nm	kgm	ft.lbs.
Cooling fan and drive belt				
Cooling fan		11	1.1	8
Fan clutch		11	1.1	8
Fan pulley		11	1.1	8
Drive belt tensioner				
Two-camshaft 12-valve engine on rear wheel drive vehicle		45	4.5	33
Two-camshaft 24-valve engine and four-camshaft engine on rear wheel drive vehicle		50	5.0	36
Cooling fan bracket – Two-camshaft 12-valve engine on rear wheel drive vehicle	M10	42	4.2	30
	M12	75	7.5	54
Cooling fan bracket				
Two-camshaft 24-valve engine and four-camshaft engine on rear wheel drive vehicle		40	4.1	30
Tensioner bracket stay – Two-camshaft 12-valve engine on rear wheel drive vehicle		24	2.4	17
Idler pulley		50	5.0	36
Tensioner bracket – Two-camshaft engine on front wheel drive vehicle		42	4.2	30
Tensioner bracket – Two-camshaft engine on rear wheel drive vehicle	M10	42	4.2	30
	M12	75	7.5	54
Tensioner bracket – Four-camshaft engine on front wheel drive vehicle		19	1.9	14
Timing indicator		11	1.1	8
Accessory mount stay	M8	23	2.3	17
	M10	50	5.0	36
Accessory mount	M12	74	7.5	54
	M10	44	4.5	33
Engine hanger		17	1.7	12
Oil filler		21	2.1	15
Cooling fan and alternator – 2001 model PAJERO				
Cooling fan		11	1.1	8
Fan clutch		11	1.1	8
Cooling fan bracket		42	4.2	30
Idler pulley		45	4.5	33
Auto tensioner	M10	45	4.5	33
	M8	24	2.4	17
Alternator	M10	45	4.5	33
	M8	23	2.3	17
Accessory mount stay		24	2.4	17
Timing indicator		11	1.1	8
Accessory mount	M12	75	7.5	54
	M10	45	4.5	33
Power steering pump bracket				
to accessory mount stay		42	4.2	30
to cylinder block		45	4.5	33

© Mitsubishi Motors Corporation Mar. 2000

			Nm	kgm	ft.lbs.
Vaccum tank and hose – GDI					
PCV pipe			11	1.1	8
Hose clamp			9.8	1.0	7.2
Vaccum pipe, hose assembly			9.8	1.0	7.2
Vaccum tank bracket			9.8	1.0	7.2
Solenoid valve			9.8	1.0	7.2
EGR system – GDI					
EGR pipe to EGR valve			19	1.9	14
EGR pipe to throttle body stay			14	1.4	10
EGR pipe nut			60	6.0	43
Water pipe assembly A			6	0.6	4
EGR valve			22	2.2	16
Intake manifold					
Air intake plenum stay			18	1.8	13
Air intake plenum			18	1.8	13
Injectors and delivery pipe assembly			12	1.2	9
Coolant temperature gauge unit			11	1.1	8
Coolant temperature sensor			30	3.0	22
Thermo switch			8	0.8	6
Water outlet fitting			19	1.9	14
Intake manifold			18	1.8	13
Water inlet fitting – Four-camshaft engine			19	1.9	14
Thermostat housing – Four-camshaft engine			19	1.9	14
Air intake plenum					
Air intake plenum cover			11	1.1	8.0
Power transister			9.8	1.0	7.2
Vacuum pipe A			9.8	1.0	7.2
Vacuum pipe B			19	1.9	14
Water outlet fitting bracket			19	1.9	14
Air intake plenum stay		M8	19	1.9	14
		M10	36	3.6	26
Ignition coil			13	1.3	9
Cover – Except vehicles for Europe and PAJERO SPORT/CHALLENGER			22	2.2	16
EGR valve – Vehicles for Europe and PAJERO SPORT/CHALLENGER			22	2.2	16
EGR pipe – Vehicles for Europe and PAJERO SPORT/CHALLENGER			18	1.8	13
EGR pipe nut – Vehicles for Europe and PAJERO SPORT/CHALLENGER			60	6.0	43
Throttle body			12	1.2	8.7
Air intake plenum assembly			18	1.8	13
Air intake fitting			18	1.8	13
Intake upper manifold			18	1.8	13
Induction control valve assembly			8.8	0.9	6.5
Vacuum hose assembly		M6	9.8	1.0	7.2
		M8	13	1.3	9
Bracket	Nut		18	1.8	13
	Bolt		24	2.4	17

		Nm	kgm	ft.lbs.
Intake system, Ignition system – GDI				
Engine hanger		17	1.7	12
Water outlet fitting bracket		14	1.4	10
Throttle body stay		19	1.9	14
Throttle body		12	1.2	9
Center cover		4	0.4	3
Ignition coil		11	1.1	8
Spark plug		25	2.5	18
Ignition coil failure sensor		6	0.6	4
Intake manifold		22	2.2	16
Timing belt – Two-camshaft engine				
Engine support bracket – Front wheel drive vehicle	M10	60	6.0	43
	M12	110	11.0	80
Crankshaft pulley bolt		181	18.1	133
Timing belt cover		11	1.1	8
Tensioner lock bolt		26	2.6	19
Camshaft sprocket		90	9.0	65
Alternator stay – 12-valve engine on rear wheel drive vehicle		25	2.5	18
Alternator bracket – 12-valve engine on rear wheel drive vehicle		25	2.5	18
Crankshaft position sensor		9	0.9	7
Camshaft position sensor <Except 2001 model PAJERO>		9	0.9	7
Camshaft position sensor <2001 model PAJERO>		11	1.1	8
Camshaft position sensor support <2001 model PAJERO>		14	1.4	10
Camshaft position sensor sensing cylinder <2001 model PAJERO>		22	2.2	16
Auto tensioner		24	2.4	17
Tensioner pulley		49	4.9	35
Tensioner arm		44	4.5	33
Idler pulley		44	4.5	33
Timing belt – Four-camshaft engine				
Engine support bracket	M10	70	7.0	51
	M12	110	11.0	80
Crankshaft pulley bolt		185	18.5	134
Timing belt cover		11	1.1	8
Rocker cover		3	0.3	2
Crankshaft position sensor <Except 2001 model PAJERO>		9	0.9	7
Camshaft position sensor		9	0.9	7
Auto tensioner		24	2.4	17
Tensioner pulley		49	4.9	35
Tensioner arm		44	4.5	33
Idler pulley <Except GDI>		55	5.5	40
<GDI>		44	4.5	33
Idler pulley bracket		42	4.2	30
Camshaft position sensor <GDI>		11	1.1	8
Camshaft position sensor support <GDI>		14	1.4	10
Camshaft position sensor sensing cylinder <GDI>		22	2.2	16
Camshaft sprocket		90	9.0	65

© Mitsubishi Motors Corporation Mar. 2000

		Nm	kgm	ft.lbs.
Bracket		24	2.4	17
Timing belt rear cover center		24	2.4	17
Timing belt rear cover		11	1.1	8
Intake manifold				
Engine coolant temperature gauge unit		11	1.1	8
Engine coolant temperature sensor		29	3.0	22
Thermo switch <Up to 1999 models PAJERO SPORT for Europe and CHALLENGER for General Export with automatic transmission, up to 2000 models CHALLENGER and L200 for Australia with automatic transmission>		6.9	0.7	5.1
Water outlet fitting		19	1.9	14
Thermostat case bracket	M6	8.8	0.9	6.5
	M8	19	1.9	14
Water outlet pipe		14	1.4	10
Rocker cover		3.9	0.4	2.9
Water inlet fitting		24	2.4	17
Thermostat case		19	1.9	14
Timing belt rear center cover		23	2.3	17
Fitting		19	1.9	14
Water passage		19	1.9	14
Injector and delivery pipe		12	1.2	8.7
Fuel inlet fitting		8.8	0.9	6.5
Fuel pressure regulator		8.8	0.9	6.5
Fuel pipe		8.8	0.9	6.5
Intake manifold		22	2.2	16
Bracket		24	2.4	13
Water hose, water pipe – GDI				
Engine coolant temperature gauge unit		11	1.1	8
Engine coolant temperature sensor		29	2.9	21
Water outlet fitting		12	1.2	9
Water outlet pipe		14	1.4	10
Water inlet fitting		12	1.2	9
Thermostat case		9	0.9	7
Water pump fitting		13	1.3	9
Timing belt rear center cover	M10	14	1.4	10
	M8	11	1.1	8
Fitting		19	1.9	14
Water passage		19	1.9	14
Water pipe	M10	14	1.4	10
	M8	6	0.6	4
Water pipe assembly B		6	0.6	4
Fuel system – GDI				
Fuel feed pipe		19	1.9	14
Fuel pump		17	1.7	12
Flange		24	2.4	17
Fuel center pipe		19	1.9	14
Injector holder		23	2.3	17
Delivery pipe and injector assembly		12	1.2	9

	Nm	kgm	ft.lbs.
Exhaust manifold			
Oil level gauge assembly	14	1.4	10
Heat protector	14	1.4	10
Exhaust manifold – Two-camshaft 12-valve engine	19	1.9	14
Exhaust manifold – Four-camshaft engine (without turbocharger)	45	4.5	33
Exhaust manifold Four-camshaft engine (with turbocharger) Two-camshaft 24-valve engine	30	3.0	22
Exhaust manifold – GDI	50	5.0	36
Bracket – Two-camshaft 12-valve engine on rear wheel drive vehicle	18	1.8	13
Water inlet pipe – Front wheel drive vehicle	14	1.4	10
Water pipe assembly – Two-camshaft 12-valve engine on rear wheel drive vehicle	14	1.4	10
Heater pipe assembly – Two-camshaft 12-valve engine on rear wheel drive vehicle	12	1.2	9
Water inlet fitting – Two-camshaft 12-valve engine on rear wheel drive vehicle	12	1.2	9
Bracket – Four-wheel drive vehicle	24	2.4	17
Water pump fitting	24	2.4	17
Water pump	24	2.4	17
Heat protector C	30	3.0	22
Turbocharger stay bolt	60	6.0	43
Exhaust fitting bolt	14	1.4	10
Oil pipe eye bolt	17	1.7	12
Flare nut	25	2.5	18
Water pipe eye bolt	31	3.1	22
Oil return pipe bolt	9	0.9	7
Turbocharger			
Turbocharger waste gate actuator bolt	12	1.2	9
Rocker arms and camshafts – Two-camshaft engine			
Oil filler <12 valve rear engine>	9	0.9	7
Rocker cover <12 valve>	3.5	0.4	2.6
Rocker cover <24 valve>	9	0.9	7
Rocker arms, shaft and bearing caps <12 valve>	20	2.0	14
Distributor adaptor <12 valve>	13	1.3	9
Rocker arms, rocker arm shaft <24 valve>	31	3.1	22
Thrust case <12 valve, Except 2001 model PAJERO>	13	1.3	9
Camshaft, rocker arms and bearing cap – Four-camshaft engine			
Bearing caps, front and rear	20	2.0	14
Bearing caps, Nos. 2, 3, 4	11	1.1	8
Crank angle sensor adaptor	24	2.4	17
Rocker arms, camshaft – GDI			
Rocker cover	3.5	0.4	2.6
Beam camshaft cap M8	24	2.4	17
Beam camshaft cap M6	11	1.1	8

		Nm	kgm	ft.lbs.
Cylinder head and valve				
Cylinder head bolt		110	11.0	80
Oil pan and oil pump				
Transmission stay – Front wheel drive vehicle		75	7.5	54
Oil pressure gauge unit – Rear wheel drive vehicles except L400 for Australia		10	1.0	7
Oil pressure switch		10	1.0	7
Oil cooler by-pass valve – Four-camshaft engine vehicles for Europe, PAJERO SPORT/ CHALLENGER and L200 without two-camshaft 24-valve engine		55	5.5	40
Oil cooler bolt – Two-camshaft 12-valve engine on front wheel drive vehicle for Europe		68	6.8	49
Oil filter bracket stay – Front wheel drive vehicle	M10	23	2.3	17
	M8	13	1.3	9
Oil filter bracket				
Bolt with head mark "4"		24	2.4	17
Bolt with head mark "7"		14	1.4	10
	M8	23	2.3	17
	M10	40	4.0	29
Drain plug		40	4.0	29
Oil level sensor – Vehicles for Europe and L400		9	0.9	7
Oil pan		6	0.6	4
Oil screen		19	1.9	14
Plug		45	4.5	33
Oil pump case		14	1.4	10
Oil pump cover		10	1.0	7
Transmission stay, left "A"		25	2.5	18
Transmission stay, left "B"		36	3.6	26
Baffle plate	M6	11	1.1	8.0
	M8	19	1.9	14
Transmission stay – L400		36	3.6	26
Cover	M6 × 10	11	1.1	8
	M6 × 18	5.9	0.6	4.3
Oil pan, upper		6	0.6	4
Oil pan, lower		11	1.1	8
Piston and connecting rod				
Connecting rod cap <Except 2001 model PAJERO>		52	5.2	38
<2001 model PAJERO>		34	3.5	25
Crankshaft, flywheel and drive plate				
Flywheel		75	7.5	54
Drive plate		75	7.5	54
Rear plate		11	1.1	8
Bell housing cover		9	0.9	7
Oil seal case		11	1.1	8
Bearing cap bolt <Except 2001 model PAJERO>	Head mark "9"	80	8.0	58
	Head mark "10"	95	9.5	69
<2001 model PAJERO>		75	7.5	54

		Nm	kgm	ft.lbs.
Detonation sensor <2001 model PAJERO>		23	2.3	17
Detonation sensor bracket <2001 model PAJERO>		29	2.9	21
Cylinder block				
Detonation sensor – Front wheel drive vehicle		23	2.3	17
Detonation sensor bracket – Front wheel drive vehicle		29	2.9	21
Roll stopper bracket – M10		42	4.2	30
Roll stopper bracket – M12		75	7.5	54
Engine support bracket	M12	75	7.5	54
	M10	42	4.2	30
	M8	22	2.2	16

© Mitsubishi Motors Corporation Mar. 2000

SEALANT

	Specified sealant	Quantity
Engine coolant temperature sensor	3M NUT Locking Part No. 4171 or equivalent	As required
Engine coolant temperature gauge unit	3M ATD Part No. 8660 or equivalent	As required
Thermo switch	3M NUT Locking Part No. 4171 or equivalent	As required
Rocker cover	3M ATD Part No. 8660 or equivalent	As required
Rocker arm shaft assembly – Two-camshaft engine	3M NUT Locking Part No. 4171 or equivalent	As required
Beam camshaft cap	MITSUBISHI GENUINE Part No. MD970389 or equivalent	As required
Cylinder head	MITSUBISHI GENUINE Part No. MD970389 or equivalent	As required
Oil pressure switch	3M ATD Part No. 8660 or THREE BOND Part No. 1141E or equivalent	As required
Oil pressure gauge unit – Rear wheel drive vehicle for Australia	3M ATD Part No. 8660 or THREE BOND Part No. 1141E or equivalent	As required
Oil pan <Except 2001 model PAJERO>	MITSUBISHI GENUINE Part No. MD997110 or equivalent	As required
<2001 model PAJERO>	MITSUBISHI GENUINE Part No. MD970389 or equivalent	As required
Oil seal case	MITSUBISHI GENUINE Part No. MD997110 or equivalent	As required

2. SPECIAL TOOLS

Tool	Number	Name	Use
	MB991559	Camshaft oil seal installer adapter	Installation of camshaft oil seal (on left bank) (Two-camshaft 24-valve engine) (Used in combination with MD998713)
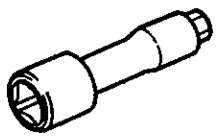	MD998051	Cylinder head bolt wrench	Loosening and tightening of cylinder head bolt
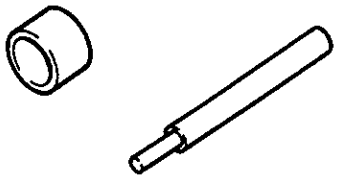	MD998115	Valve guide installer	Removal and installation of valve guide (Two-camshaft 12-valve engine)
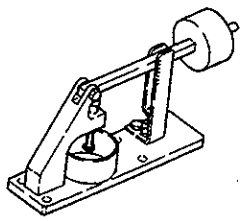	MD998440	Leak-down tester	Leak-down test of lash adjuster (Two-camshaft engine)
	MD998441	Lash adjuster retainer	Air bleeding of lash adjuster (Two-camshaft engine)
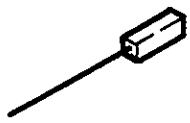	MD998442	Air bleed wire	Air bleeding of lash adjuster
	MD998443	Auto-lash adjuster holder	Holding of the lash adjuster to prevent it from falling when rocker shaft assembly is removed or installed (Two-camshaft engine)

© Mitsubishi Motors Corporation Nov. 1995

Tool	Number	Name	Use
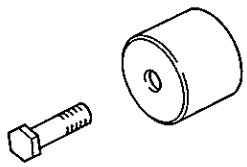	MD998713	Camshaft oil seal installer	Press fitting the camshaft oil seal (Two-camshaft engine)
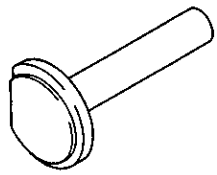	MD998714	Circular packing installer	Installation of circular packing (Two-camshaft 12-valve engine)
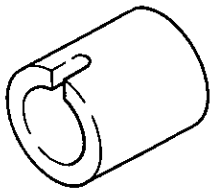	MD998716	Crankshaft wrench	Rotation of crankshaft when installing piston, connecting rod assembly or timing belt (Two-camshaft 12-valve engine)
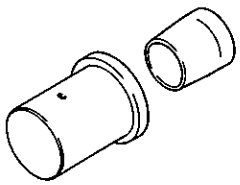	MD998717	Crankshaft front oil seal installer	Installation of crankshaft front oil seal
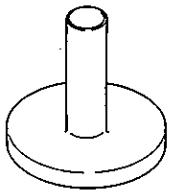	MD998718	Crankshaft rear oil seal installer	Press fitting crankshaft rear oil seal
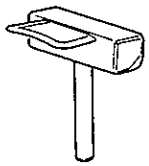	MD998727	Oil pan remover	Removal of oil pan
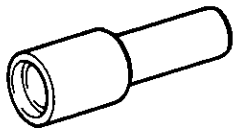	MD998729	Valve stem seal installer	Installation of valve stem seal (Two-camshaft 12-valve engine)

© Mitsubishi Motors Corporation Aug. 1994

Tool	Number	Name	Use
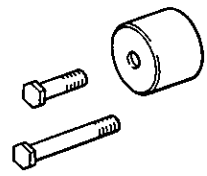	MD998761	Camshaft oil seal installer	Press fitting the camshaft oil seal (Four-camshaft engine)
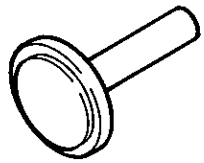	MD998762	Circular packing installer	Installation of circular packing (Four-camshaft engine)
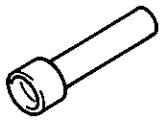	MD998763	Valve stem seal installer	Installation of valve stem seal (Four-camshaft engine)
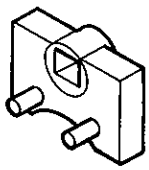	MD998767	Tensioner pulley socket wrench	Adjustment of timing belt tension (Four-camshaft engine)
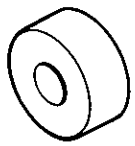	MD998769	Crankshaft pulley spacer	Rotation of crankshaft when installing piston, connecting rod assembly or timing belt (Four-camshaft engine) (Two-camshaft 24-valve engine)
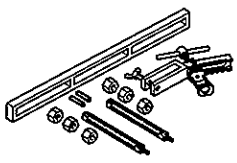	MD998772	Valve spring compressor	Compressor of valve spring
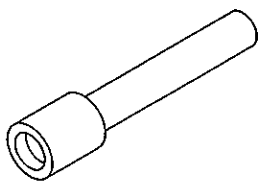	MD998774	Valve stem seal installer	Installation of valve stem seal

Tool	Number	Name	Use
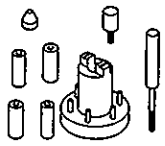	MD998780	Piston pin setting tool	Removal and installation of piston pin
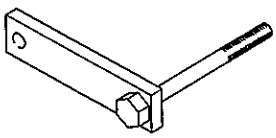	MD998781	Flywheel stopper	Holding flywheel or drive plate
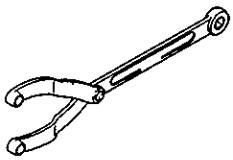	MB990767	End yoke holder	Holding camshaft sprocket (Used in combination with MD998715)
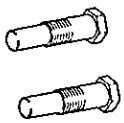	MD998715	Pulley holder pin	Holding camshaft sprocket (Used in combination with MB990767)

3. COOLING FAN AND DRIVE BELT

REMOVAL AND INSTALLATION

(Two-camshaft 12-valve engine for front wheel drive vehicle)

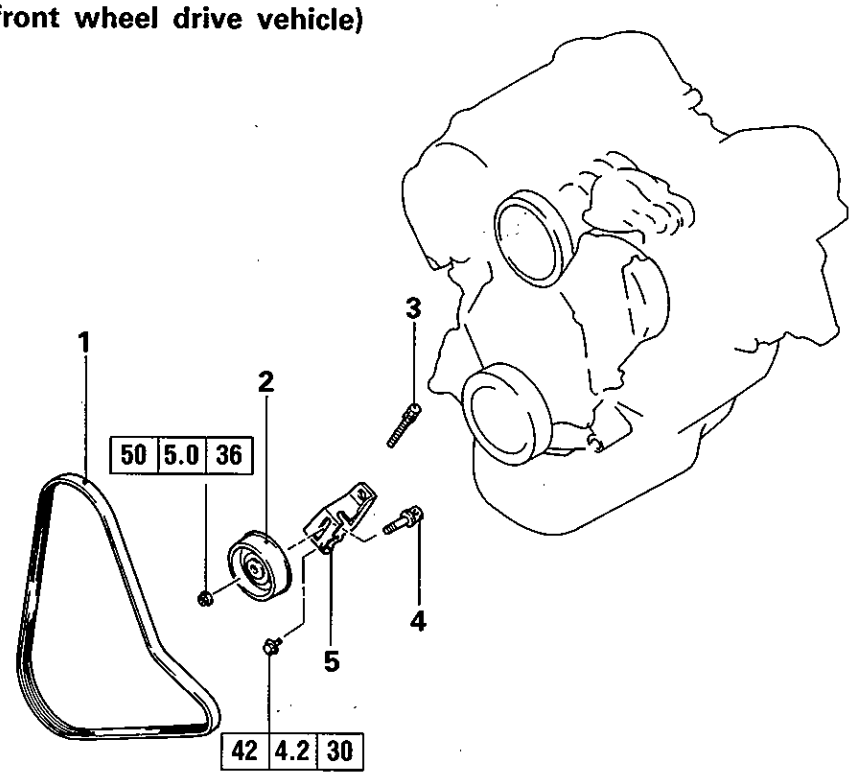

Removal steps

- ◆B◆ 1. Drive belt
- 2. Drive belt tensioner
- 3. Adjusting bolt
- 4. Adjusting stud
- 5. Tensioner bracket

7EN0345

REMOVAL AND INSTALLATION

(Two-camshaft 12-valve engine for rear wheel drive vehicle)

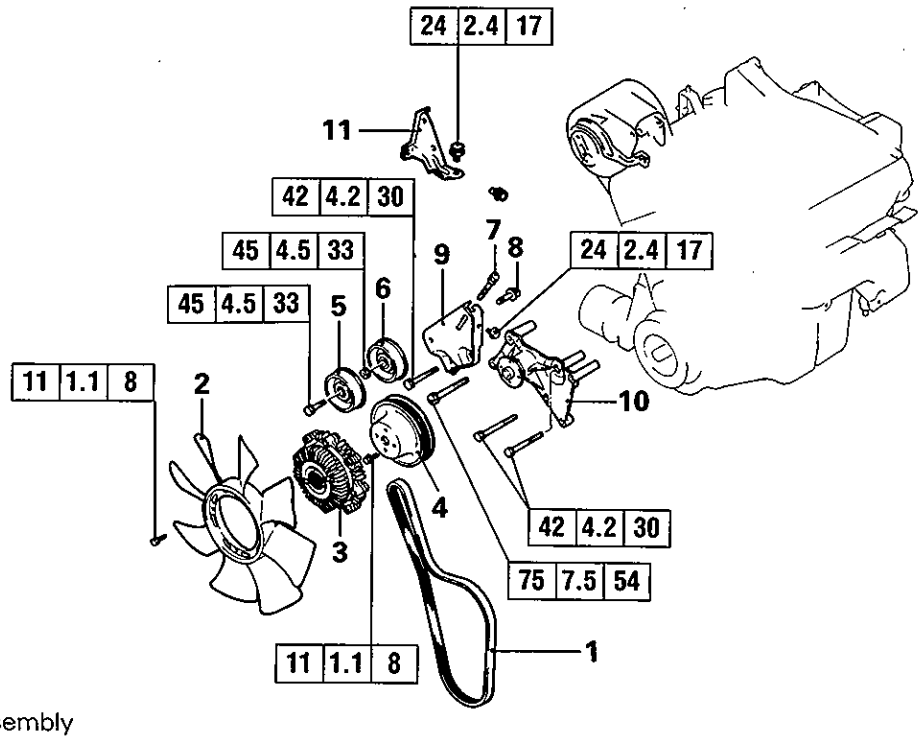

Removal steps

- ◆B◆ 1. Drive belt
- 2. Cooling fan
- 3. Fan clutch
- 4. Fan pulley
- 5. Drive belt tensioner A
- 6. Drive belt tensioner B
- 7. Adjusting bolt
- 8. Adjusting stud
- 9. Tensioner bracket
- ◆A◆ 10. Cooling fan bracket assembly
- 11. Tensioner bracket stay

7EN0346

© Mitsubishi Motors Corporation Aug. 1994

REMOVAL AND INSTALLATION

(Two-camshaft 24-valve engine for rear wheel drive vehicle)

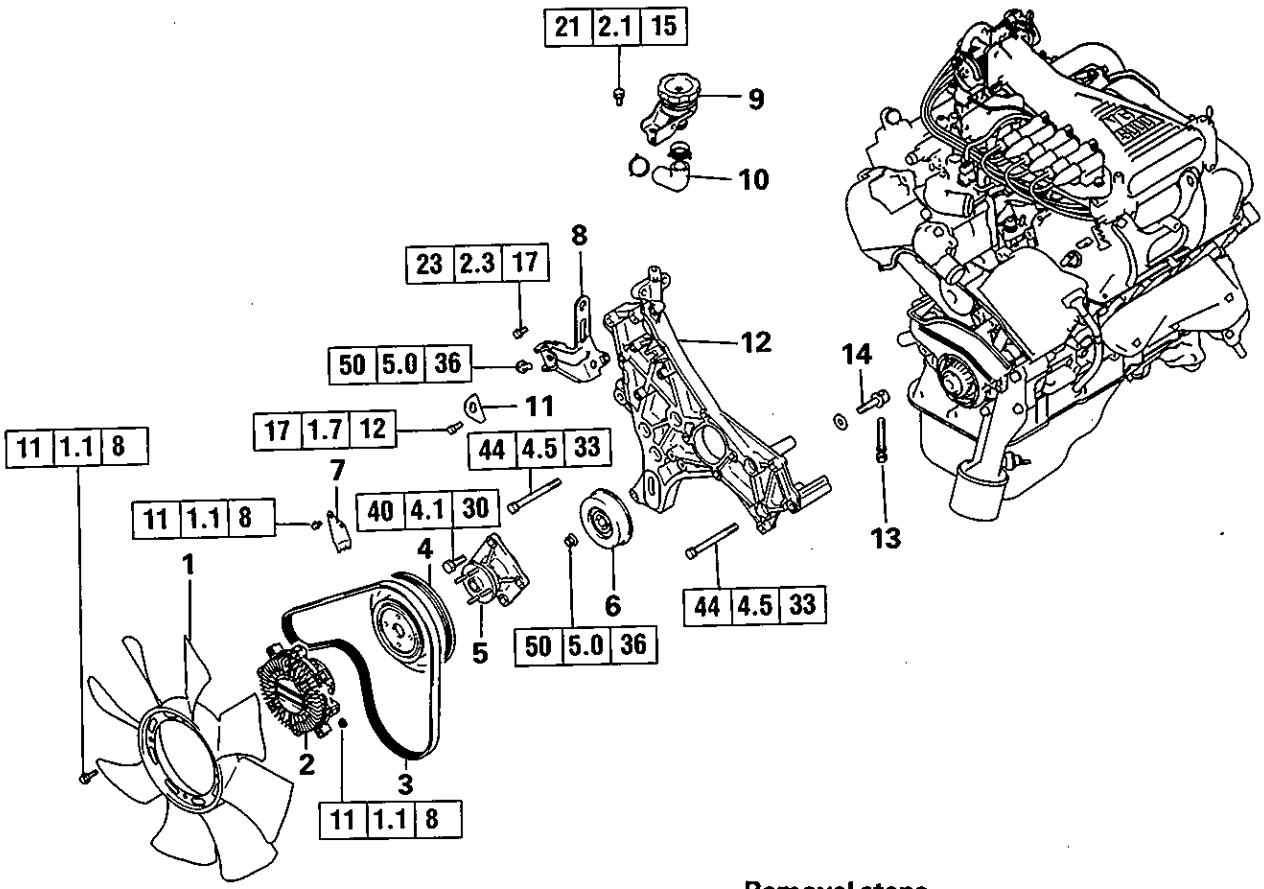

Removal steps

1. Cooling fan
2. Fan clutch
◆B◆ 3. Drive belt
4. Cooling fan pulley
5. Cooling fan bracket
6. Drive belt tensioner pulley
7. Timing indicator
8. Accessory mount stay
9. Oil filler
10. Tube
11. Engine hanger
12. Accessory mount
13. Adjusting bolt
14. Adjusting stud

7EN0778

© Mitsubishi Motors Corporation Aug. 1994

REMOVAL AND INSTALLATION

(Four-camshaft engine for front wheel drive vehicle)

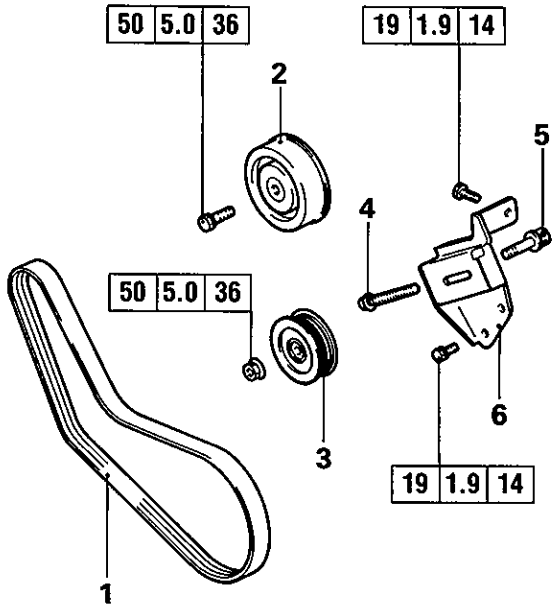

Removal steps

◆B◆ 1. Drive belt
2. Idler pulley
3. Tensioner pulley
4. Adjusting bolt
5. Adjusting stud
6. Tensioner bracket

7EN0347

REMOVAL AND INSTALLATION

(Four-camshaft engine for rear wheel drive vehicle)

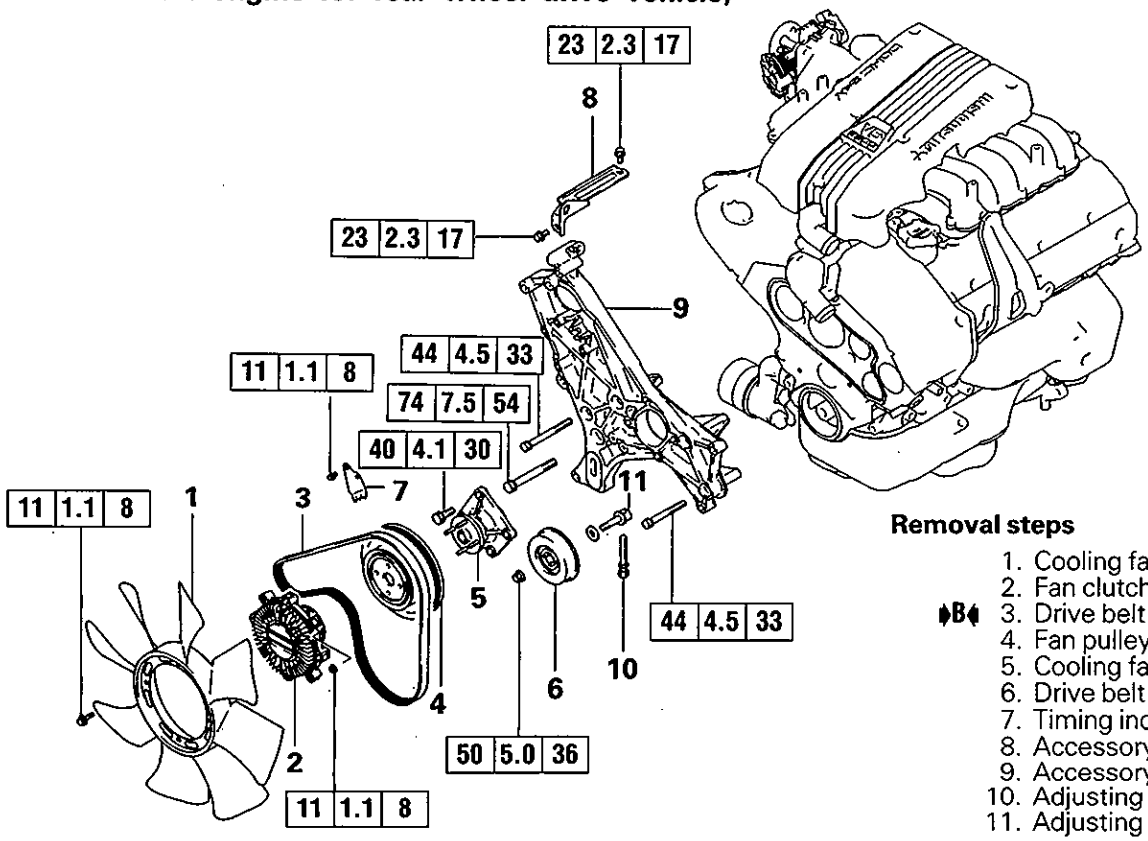

Removal steps

1. Cooling fan
2. Fan clutch
◆B◆ 3. Drive belt
4. Fan pulley
5. Cooling fan bracket
6. Drive belt tensioner
7. Timing indicator
8. Accessory mount stay
9. Accessory mount
10. Adjusting bolt
11. Adjusting stud

7EN0684

© Mitsubishi Motors Corporation Aug. 1994

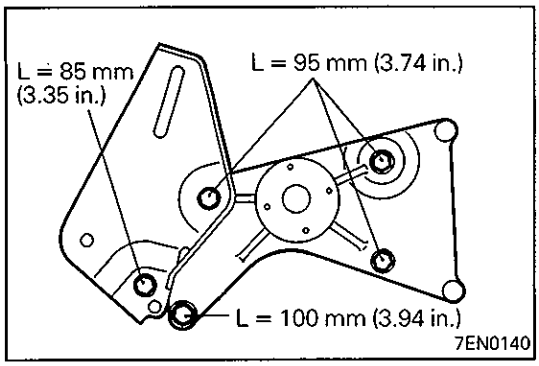

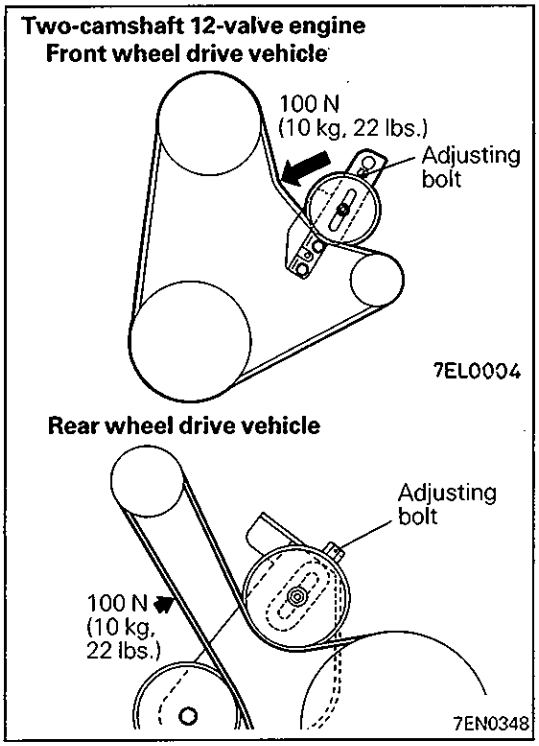

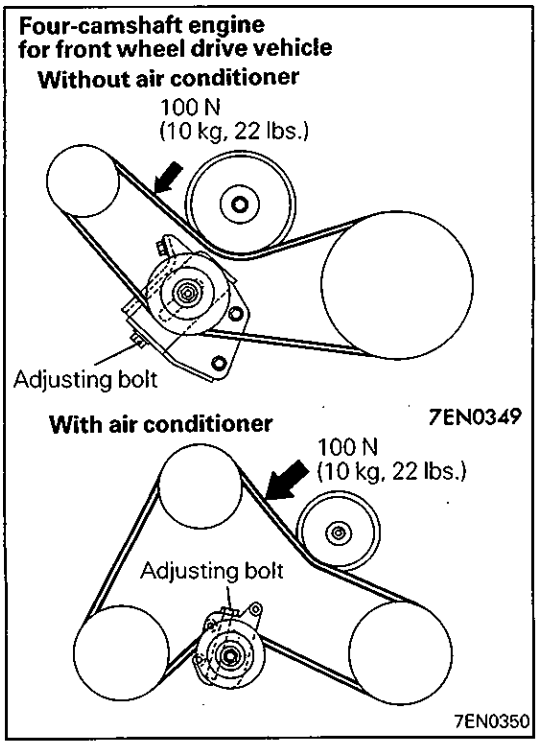

SERVICE POINTS OF INSTALLATION

◆A◆ INSTALLATION OF COOLING FAN BRACKET ASSEMBLY AND TENSIONER BRACKET (Rear wheel drive vehicle)

(1) Since the bolts for the tensioner bracket and cooling fan bracket assembly mounting vary in size for different mounting points, be careful not to mix them.

◆B◆ ADJUSTMENT OF DRIVE BELT TENSION

(1) Adjust the belt tension by turning the adjusting bolt in either direction so that the deflection resulting from applying 100 N (10 kg, 22 lbs.) pressure will have the standard value.

Standard value:

New belt
Two-camshaft 12-valve engine
4.0 – 5.0 mm (0.157 – 0.197 in.) ..... Front wheel drive vehicle
6.5 – 8.0 mm (0.256 – 0.315 in.) ..... Rear wheel drive vehicle
Two-camshaft 24-valve engine
A
4.0 – 5.0 mm (0.157 – 0.197 in.)
B
5.5 – 7.5 mm (0.217 – 0.295 in.)
Four-camshaft engine
3.5 – 4.0 mm (0.138 – 0.157 in.) ..... Front wheel drive vehicle
A
4.0 – 5.0 mm (0.157 – 0.197 in.) ..... Rear wheel drive vehicle
B
5.5 – 7.5 mm (0.217 – 0.295 in.) ..... Rear wheel drive vehicle

Used belt
Two-camshaft 12-valve engine
7.0 mm (0.276 in.) ..... Front wheel drive vehicle
9.0 mm (0.354 in.) ..... Rear wheel drive vehicle
Two-camshaft 24-valve engine
A
5.5 – 6.5 mm (0.217 – 0.256 in.)
B
8.0 – 9.0 mm (0.315 – 0.354 in.)

A: Between cooling fan pulley and crankshaft pulley
B: Between cooling fan pulley and alternator

© Mitsubishi Motors Corporation Aug. 1994

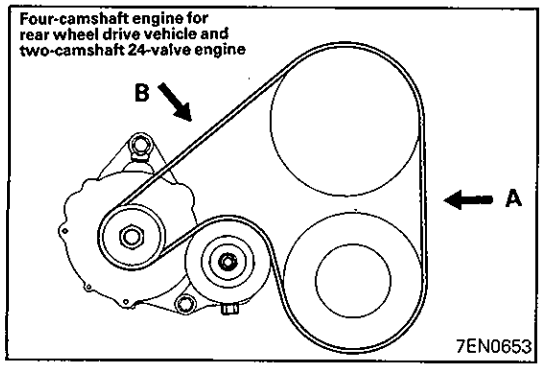

Four-camshaft engine
4.0 – 5.0 mm ..... Front wheel drive vehicle
(0.157 – 0.197 in.)
A
5.5 – 6.5 mm ..... Rear wheel drive vehicle
(0.217 – 0.256 in.)
B
8.0 – 9.0 mm ..... Rear wheel drive vehicle
(0.315 – 0.354 in.)

A: Between cooling fan pulley and crankshaft pulley
B: Between cooling fan pulley and alternator

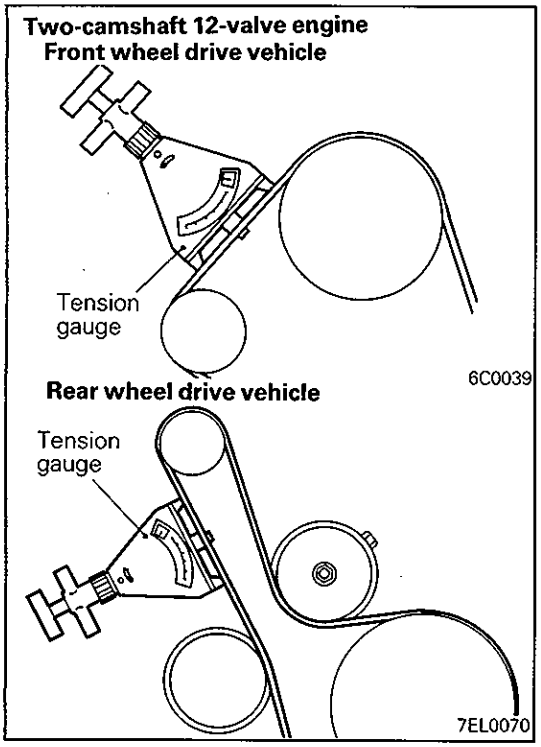

(2) The tension may also be measured with a tension gauge by using the gauge on any span between pulleys.

Standard value:

New belt
Two-camshaft 12-valve engine
700 – 900 N ..... Front wheel drive vehicle
(70 – 90 kg, 154 – 198 lbs.)
500 – 700 N ..... Rear wheel drive vehicle
(50 – 70 kg, 110 – 154 lbs.)
Two-camshaft 24-valve engine
637 – 833 N
(65 – 85 kg, 143 – 187 lbs.)
Four-camshaft engine
650 – 850 N ..... Front wheel drive vehicle
(65 – 85 kg, 143 – 187 lbs.)
637 – 833 N ..... Rear wheel drive vehicle
(65 – 85 kg, 143 –187 lbs.)

Used belt
Two-camshaft 12-valve engine
500 N ..... Front wheel drive vehicle
(50 kg, 110 lbs.)
400 N ..... Rear wheel drive vehicle
(40 kg, 88 lbs.)
Two-camshaft 24-valve engine
441 – 539 N
(45 – 55 kg, 99 – 121 lbs.)
Four-camshaft engine
450 – 500 N ..... Front wheel drive vehicle
(45 – 50 kg, 99 – 110 lbs.)
441 – 539 N ..... Rear wheel drive vehicle
(45 – 55 kg, 99 –121 lbs.)

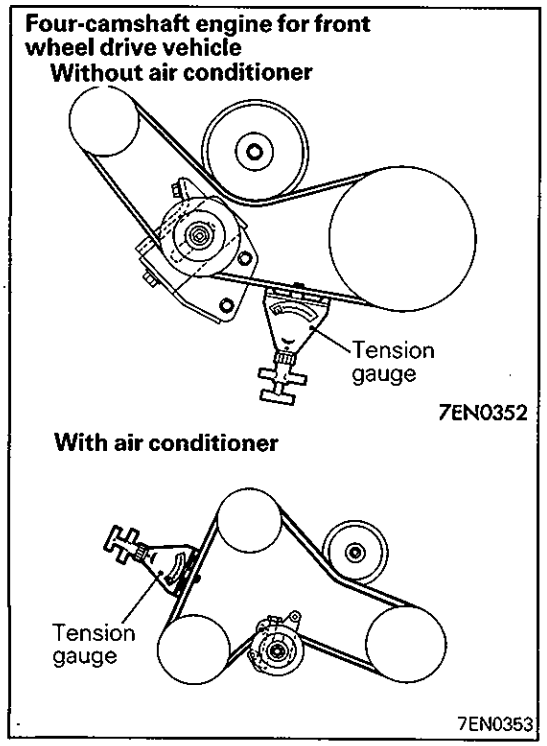

© Mitsubishi Motors Corporation Aug. 1994

Four-camshaft engine for rear wheel drive vehicle

Two-camshaft 24 valve engine

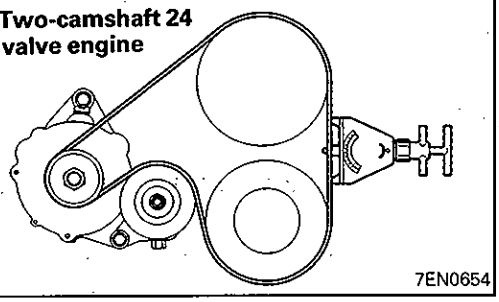

7EN0654

3a. COOLING FAN AND ALTERNATOR (2001 MODEL PAJERO)

REMOVAL AND INSTALLATION

(GDI)

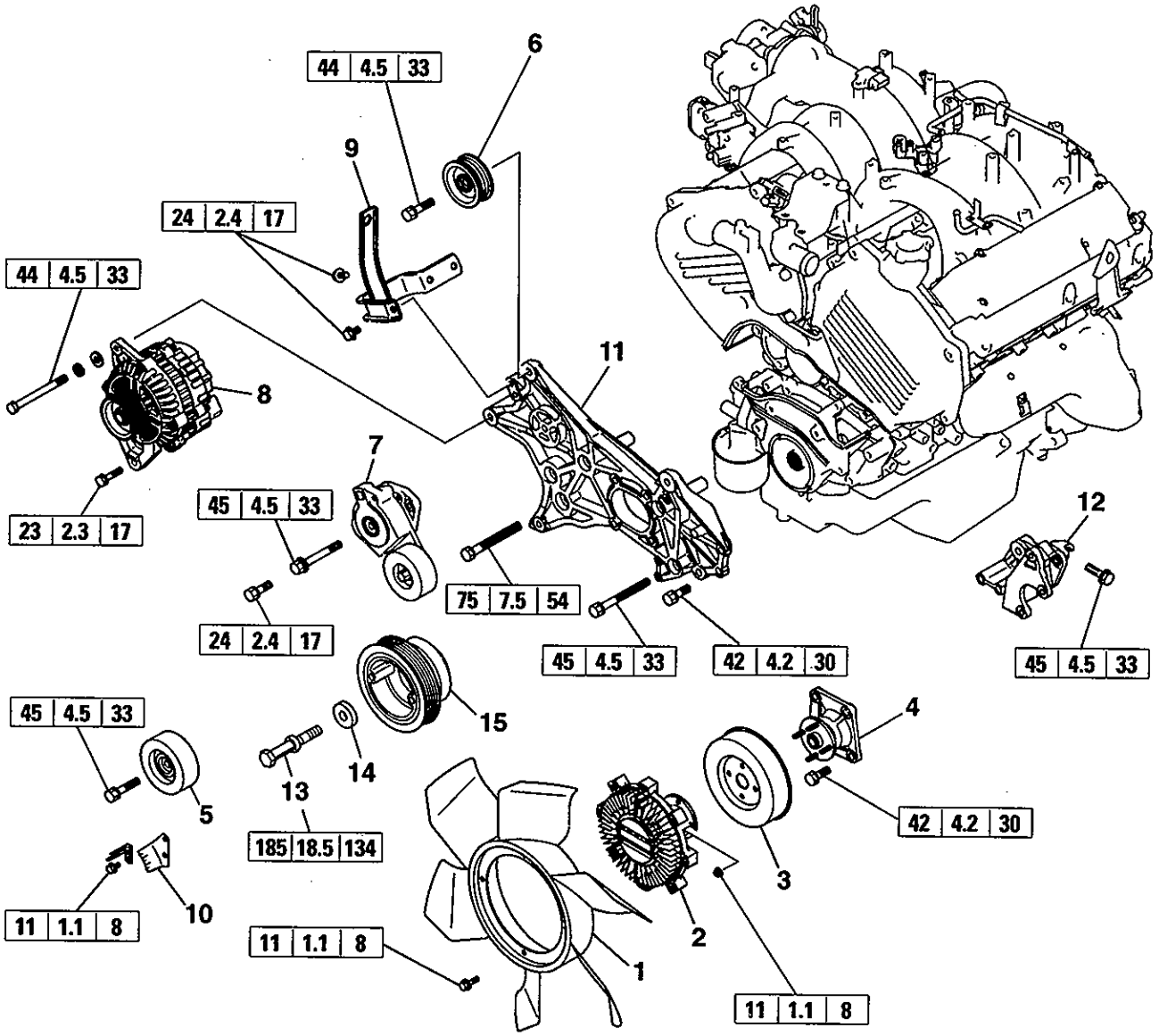

Removal steps

1. Cooling fan
2. Fan clutch
3. Cooling fan pulley
4. Cooling fan bracket
5. Idler pulley
6. Idler pulley
7. Auto tensioner
8. Alternator
9. Accessory mount stay
10. Timing indicator
11. Accessory mount
12. Power steering pump bracket

◇A◇ ▶A◀ 13. Crankshaft bolt

14. Crankshaft pulley washer
15. Damper pulley

7EN1514

© Mitsubishi Motors Corporation Mar. 2000

REMOVAL AND INSTALLATION

(6G72, 6G74-MPI)

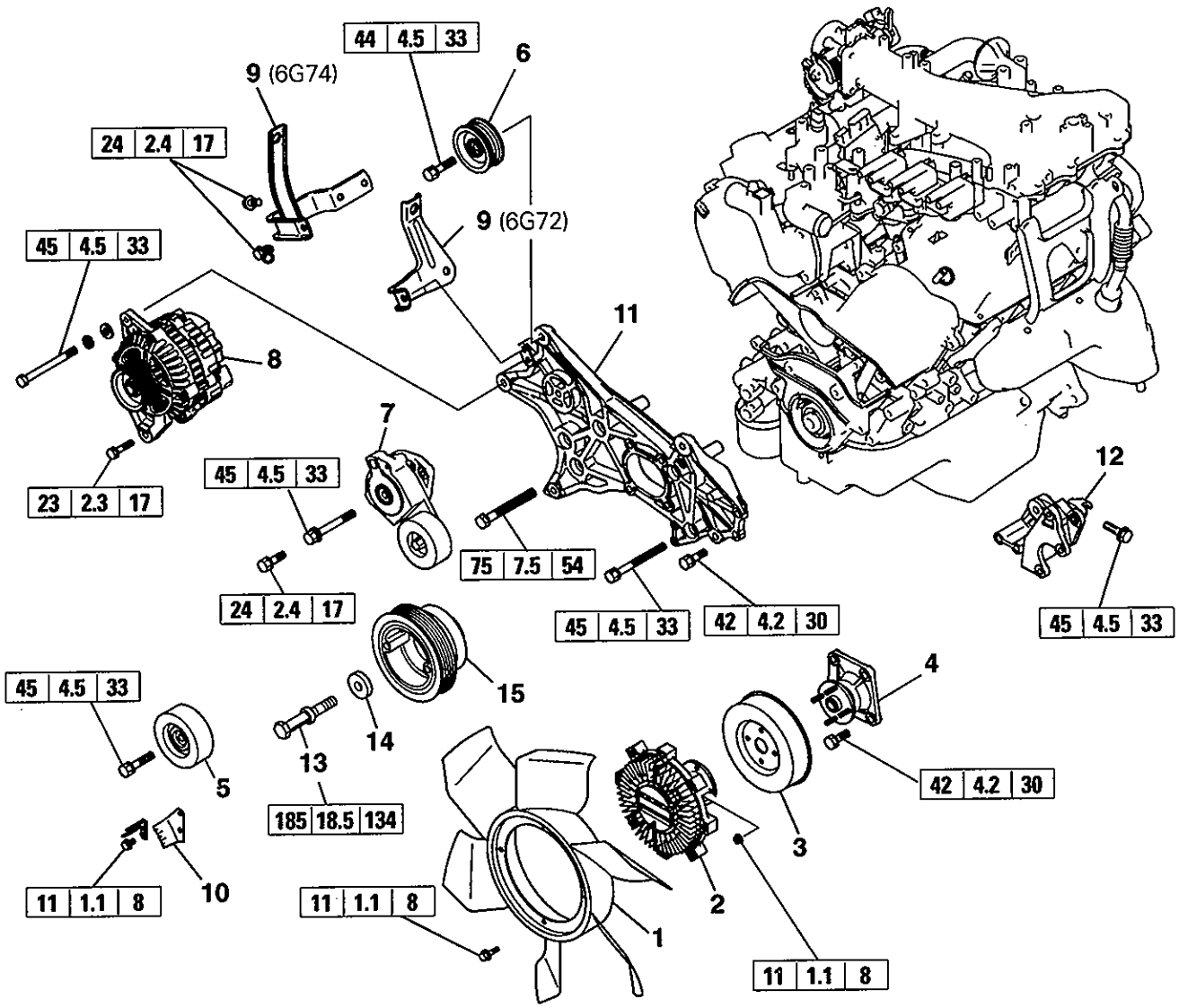

Removal steps

1. Cooling fan
2. Fan clutch
3. Cooling fan pulley
4. Cooling fan bracket
5. Idler pulley
6. Idler pulley
7. Auto tensioner
8. Alternator
9. Accessory mount stay
10. Timing indicator
11. Accessory mount
12. Power steering pump bracket

◇A◇ ◆A◆13. Crankshaft bolt

14. Crankshaft pulley washer
15. Damper pulley

7EN1562

© Mitsubishi Motors Corporation Mar. 2000

Added

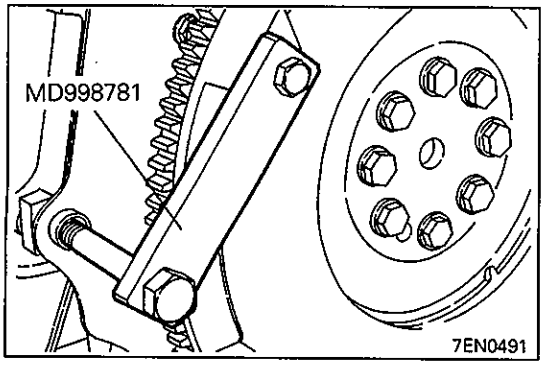

SERVICE POINT OF REMOVAL

◇A◇ REMOVAL OF CRANKSHAFT BOLT

(1) Using the special tool, hold the flywheel or drive plate.
(2) Remove the crankshaft bolt.

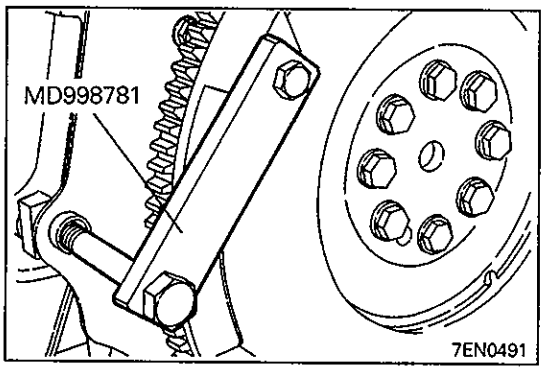

SERVICE POINT OF INSTALLATION

◆A◆ INSTALLATION OF CRANKSHAFT BOLT

© Mitsubishi Motors Corporation Mar. 2000

3b. VACUUM TANK AND HOSE (GDI)

REMOVAL AND INSTALLATION

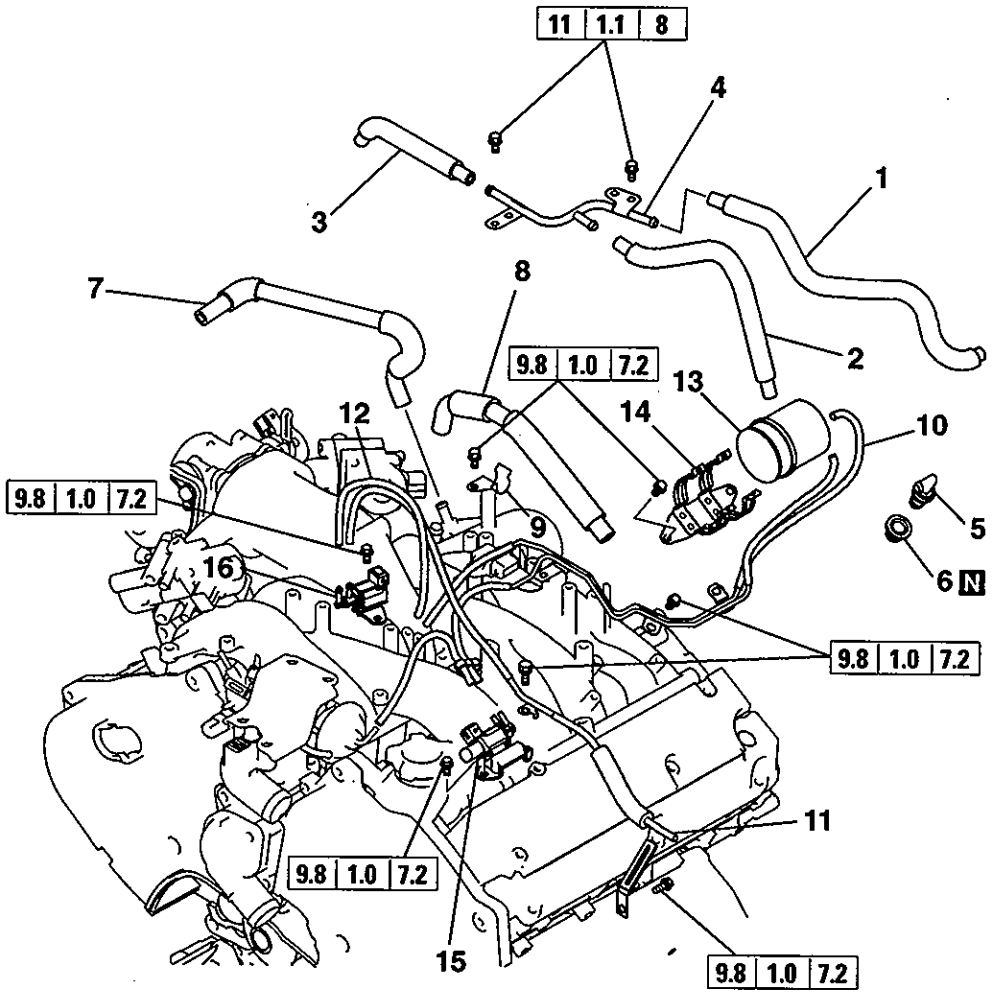

Removal steps

1. PCV hose A
2. PCV hose C
3. PCV hose B
4. PCV pipe
5. PCV valve
6. PCV valve gasket
7. Breather hose
8. Blow-by hose
9. Hose clamp
10. Vacuum pipe, hose assembly
11. Vacuum pipe, hose assembly
12. Vacuum hose
13. Vacuum tank
14. Vacuum tank bracket
15. Solenoid valve (induction control valve)
16. Solenoid valve (purge)

7EN1543

© Mitsubishi Motors Corporation Mar. 2000

Added

3c. EGR SYSTEM (GDI)

REMOVAL AND INSTALLATION

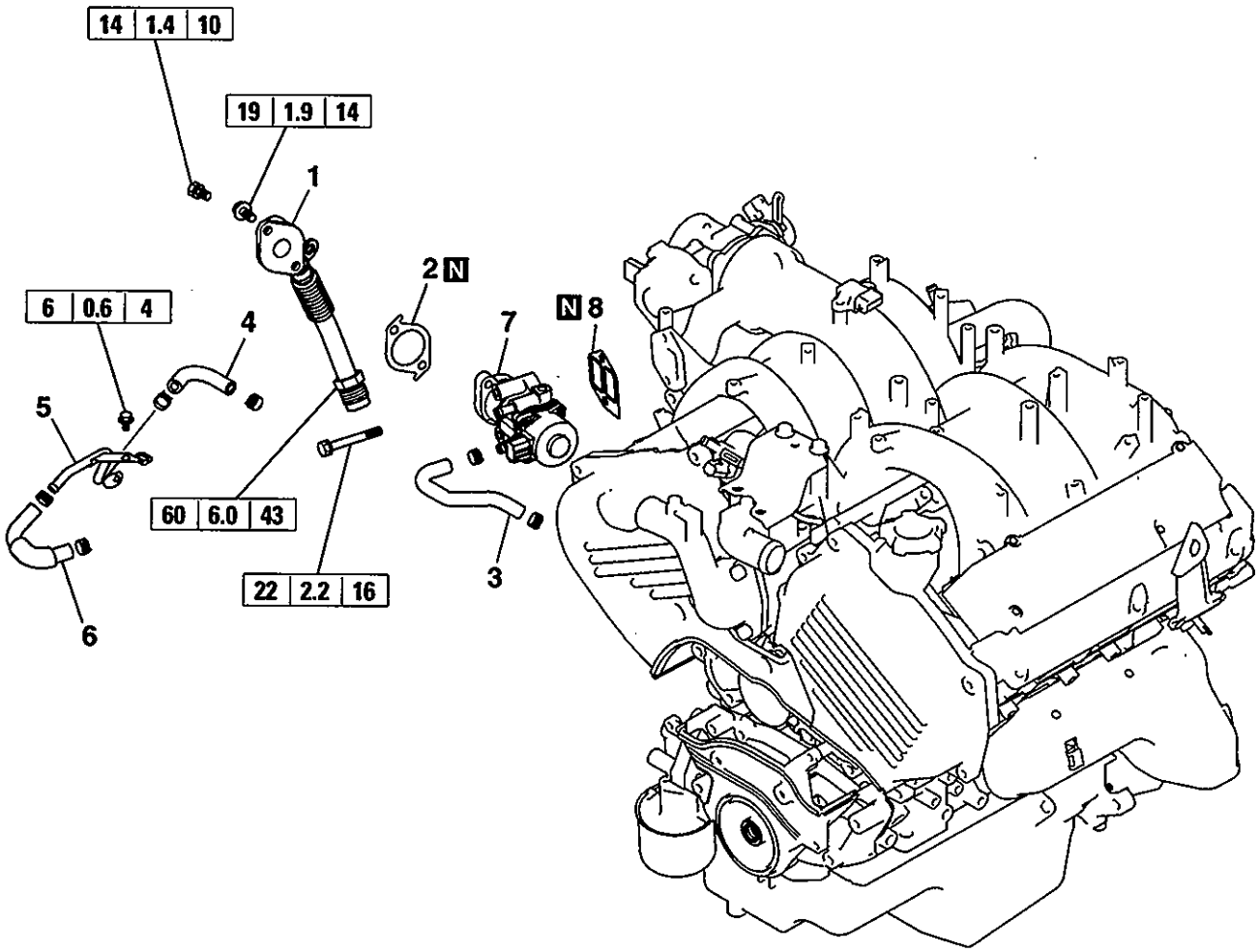

Removal steps

1. EGR pipe
2. EGR pipe gasket
3. Water hose
4. Water hose
5. Water pipe assembly A
6. Water hose
7. EGR valve
8. EGR valve gasket

7EN1516

© Mitsubishi Motors Corporation Mar. 2000

Added

4. INTAKE MANIFOLD

REMOVAL AND INSTALLATION

(Two-camshaft engine for front wheel drive vehicle)

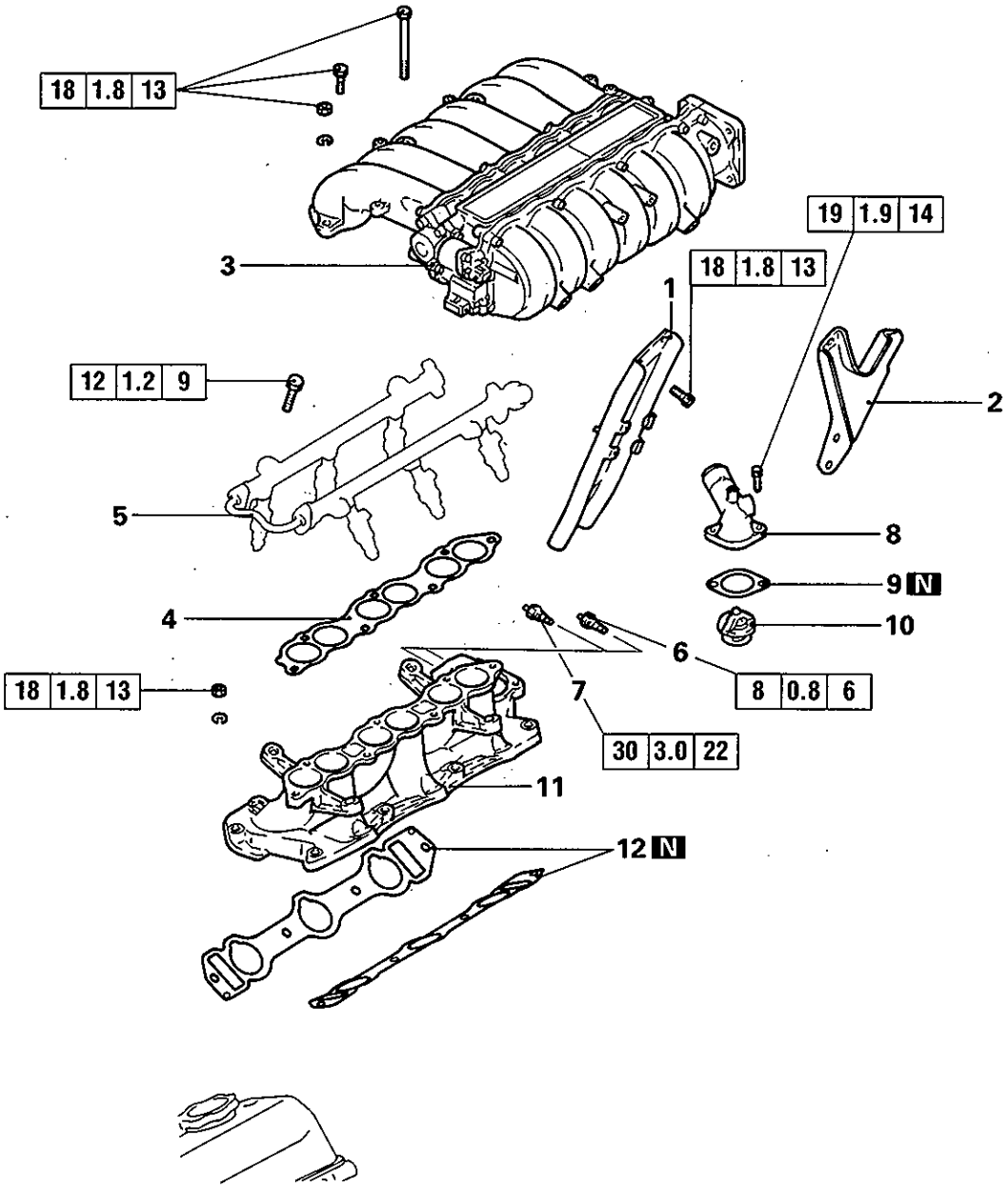

Removal steps

1. Air intake plenum stay, front
2. Air intake plenum stay, rear
3. Air intake plenum
4. Air intake plenum gasket
5. Injectors and delivery pipe
◆D◆ 6. Coolant temperature gauge unit
◆C◆ 7. Coolant temperature sensor
8. Water outlet fitting
◆B◆ 9. Water outlet fitting gasket
10. Thermostat
11. Intake manifold
12. Intake manifold gasket

7EN0354

© Mitsubishi Motors Corporation Oct. 1990

REMOVAL AND INSTALLATION

(Two-camshaft engine for rear wheel drive vehicle)

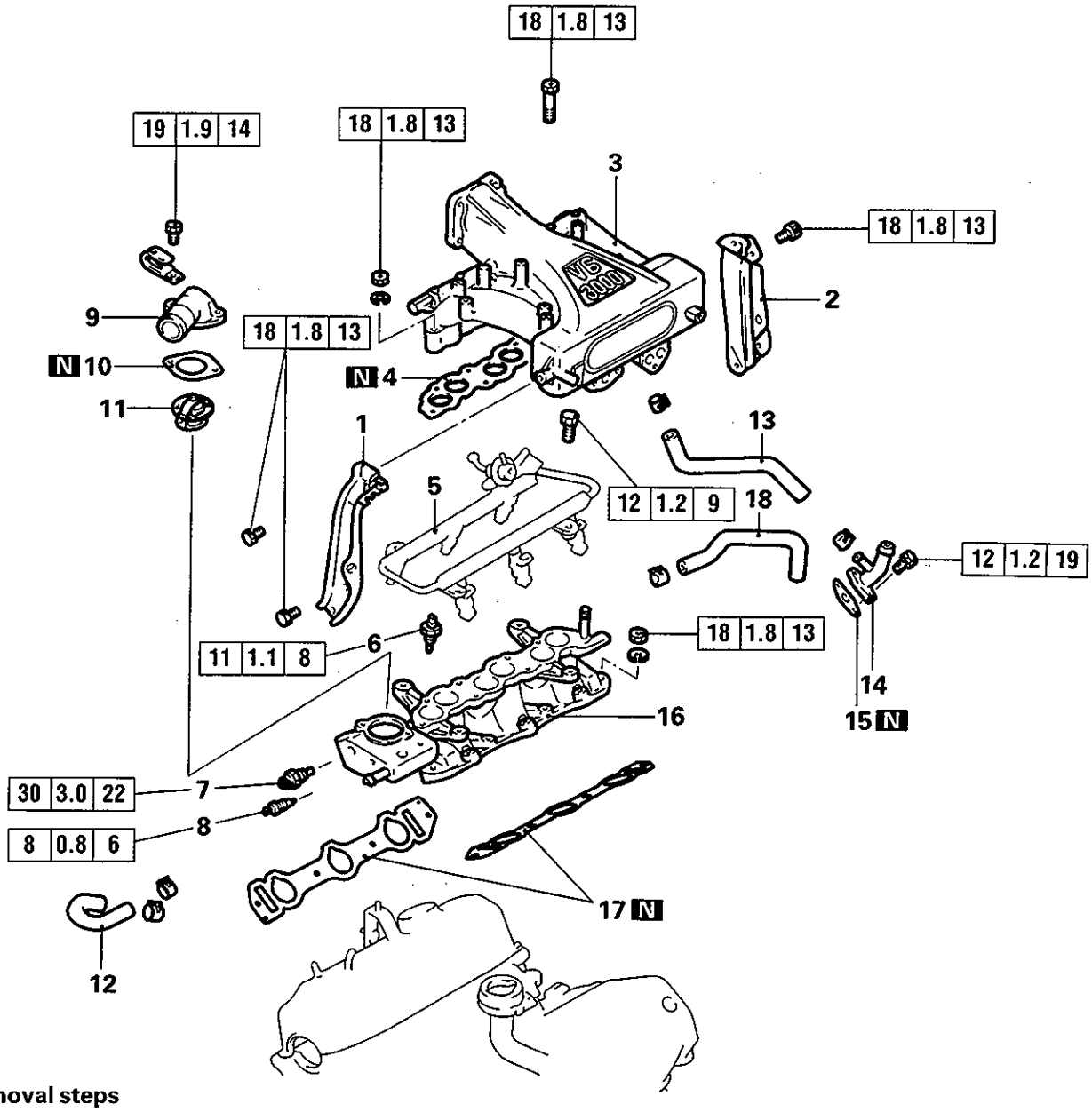

Removal steps

1. Air intake plenum stay, front
2. Air intake plenum stay, rear
3. Air intake plenum
4. Air intake plenum gasket
5. Injectors and delivery pipe
◆D◆ 6. Coolant temperature gauge unit
◆C◆ 7. Coolant temperature sensor
8. Thermo switch
9. Water outlet fitting
◆B◆ 10. Water outlet fitting gasket
11. Thermostat
12. Water hose
13. Water hose (A)
14. Heater pipe
15. Heater pipe gasket
16. Intake manifold
17. Intake manifold gasket
18. Water hose (B)

7EN0355

© Mitsubishi Motors Corporation Oct. 1990

REMOVAL AND INSTALLATION

(Four-camshaft engine for front wheel drive vehicle)

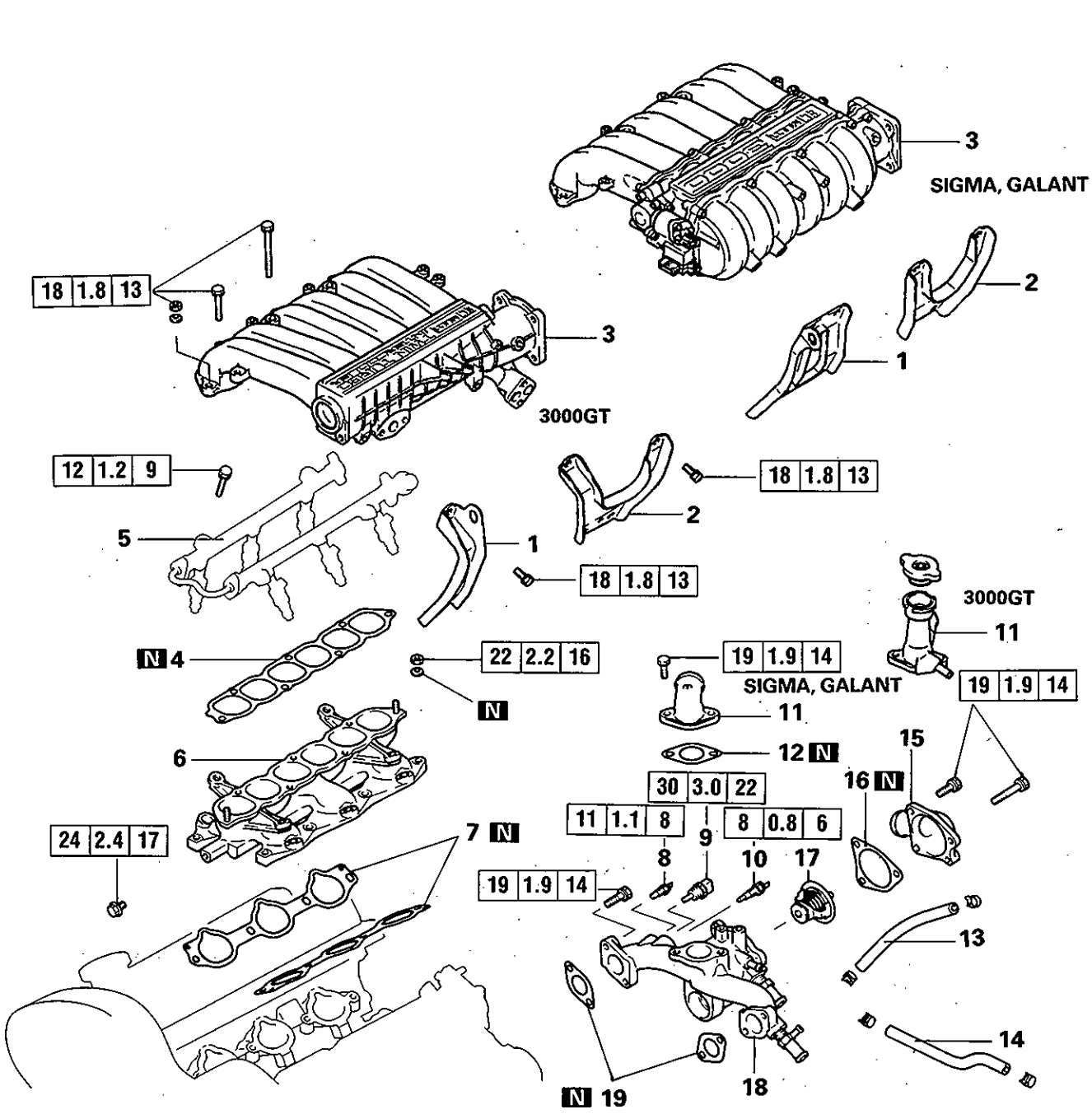

Removal steps

1. Air intake plenum stay, front
2. Air intake plenum stay, rear
3. Air intake plenum
4. Air intake plenum gasket
5. Injectors and delivery pipe
◇A◇ ◆E◆ 6. Intake manifold
7. Intake manifold gasket
◆D◆ 8. Cooling temperature gauge unit
◆C◆ 9. Cooling temperature sensor
10. Thermo switch
11. Water outlet fitting
12. Water outlet fitting gasket
13. Water hose
14. Water hose A
15. Water inlet fitting
16. Water inlet fitting gasket
◆A◆ 17. Thermostat
18. Thermostat housing
19. Thermostat housing gasket

7EN0584

© Mitsubishi Motors Corporation Aug. 1994

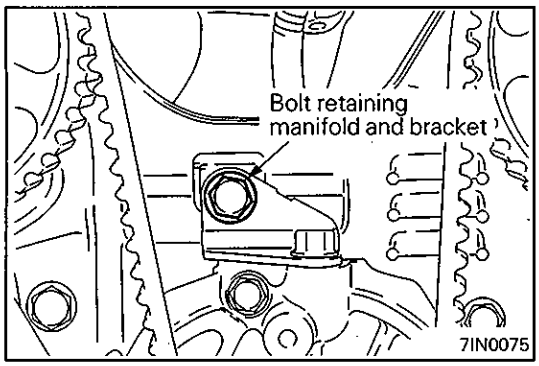

SERVICE POINT OF INSTALLATION

◇A◇ REMOVAL OF INTAKE MANIFOLD (Four-camshaft engine)

(1) Remove the manifold mounting bolt which also retains the bracket (see illustration).

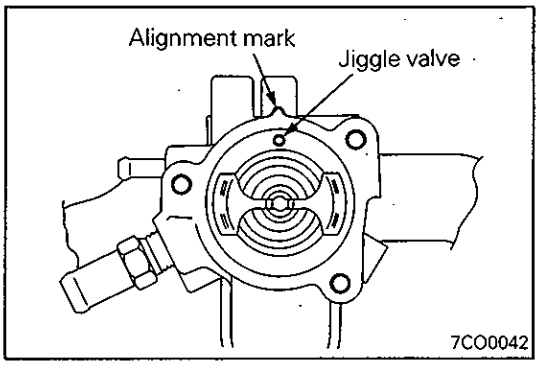

SERVICE POINTS OF INSTALLATION

◆A◆ INSTALLATION OF THERMOSTAT (Four-camshaft engine)

(1) Install the water outlet fitting gasket in the spot faced portion of the thermostat housing. Line up the jiggle valve with the alignment mark on the thermostat housing.

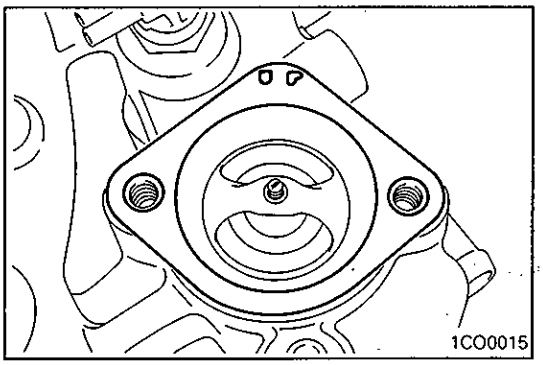

◆B◆ INSTALLATION OF WATER OUTLET FITTING GASKET FOR RUBBER COATED METAL GASKET ONLY (Two-camshaft engine)

(1) Install the water outlet fitting gasket with its "UP" mark facing up (toward the water outlet fitting side).

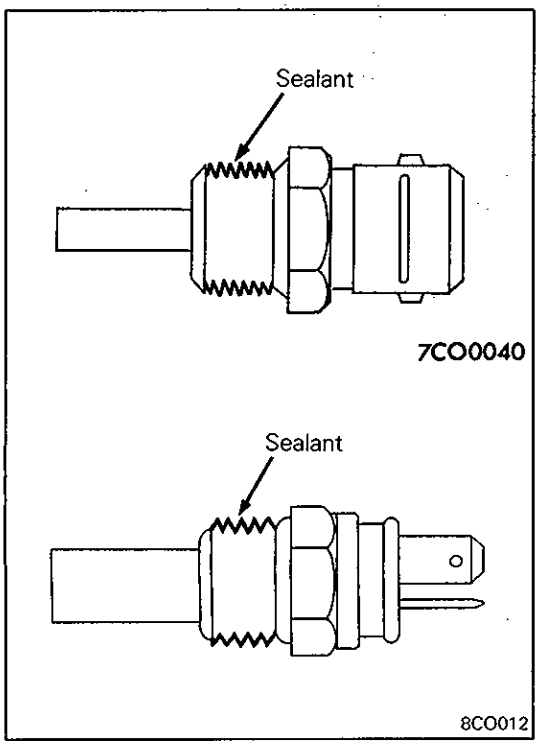

◆C◆ APPLICATION OF SEALANT TO ENGINE COOLANT TEMPERATURE SENSOR

Specified sealant:
3M Nut Locking No. 4171 or equivalent

© Mitsubishi Motors Corporation Oct. 1990

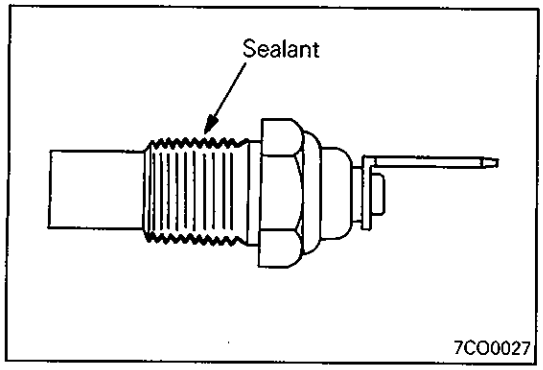

◆D◆ APPLICATION OF SEALANT TO ENGINE COOLANT TEMPERATURE GAUGE UNIT

Specified sealant: 3M Part No.8660 or equivalent

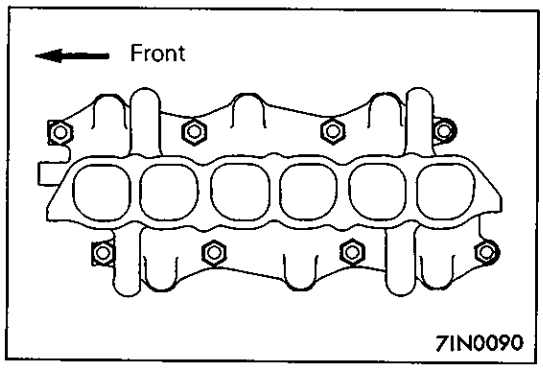

◆E◆ INSTALLATION OF INTAKE MANIFOLD

(1) Tighten the nuts on the right bank to 5 – 8 Nm (0.5 – 0.8 kgfm, 4 – 6 ft.lbs.).
(2) Tighten the nuts on the left bank to the specified torque. Then tighten the nuts on right bank to the specified torque.
(3) Tighten the nuts on the left bank and those on the right bank again in that order.

© Mitsubishi Motors Corporation Aug. 1994

NOTES

4a. AIR INTAKE PLENUM

REMOVAL AND INSTALLATION

(Four-camshaft engine for rear wheel drive vehicle)

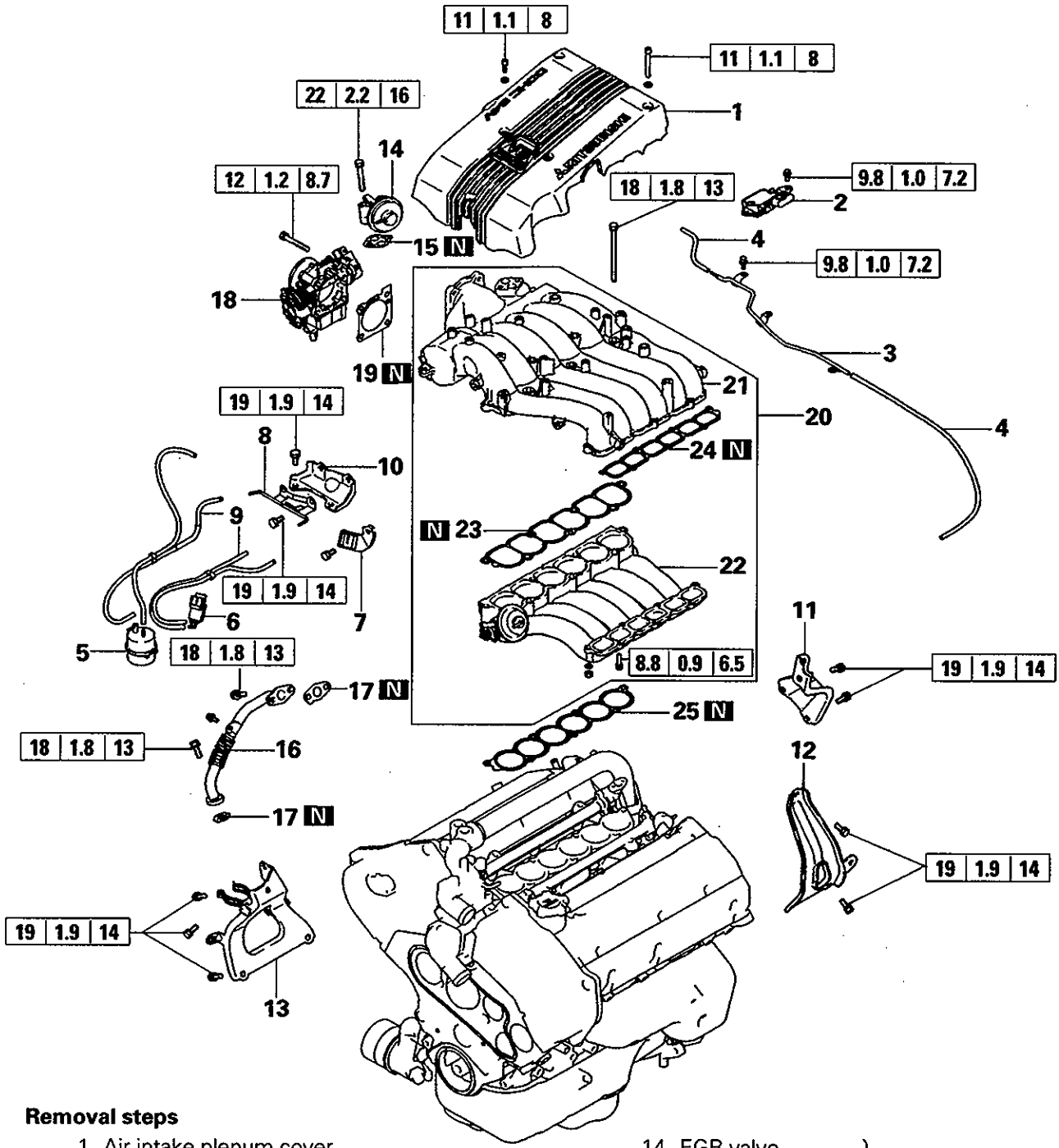

Removal steps

1. Air intake plenum cover
2. Power transister
3. Vacuum pipe A } Except vehicles for GCC
4. Vacuum hose A } Except vehicles for GCC
5. Vacuum tank
6. Variable induction control valve solenoid
7. Variable induction control valve solenoid bracket
8. Vacuum pipe B
9. Vacuum hose B
10. Water outlet fitting bracket
11. Air intake plenum stay, rear
12. Air intake plenum stay, left
13. Air intake plenum stay, right
14. EGR valve } Except vehicles for Australia
15. EGR valve gasket } Except vehicles for Australia
16. EGR pipe } Except vehicles for Australia
17. EGR pipe gasket } Except vehicles for Australia
18. Throttle body
19. Throttle body gasket
20. Air intake plenum assembly
21. Air intake plenum, upper
22. Induction control valve assembly
23. Induction control valve gasket, S
24. Induction control valve gasket, P
25. Air intake plenum gasket

7EN0681

© Mitsubishi Motors Corporation Aug. 1994

REMOVAL AND INSTALLATION

(Two-camshaft 24-valve engine – 6G72 for PAJERO/MONTERO and L400)

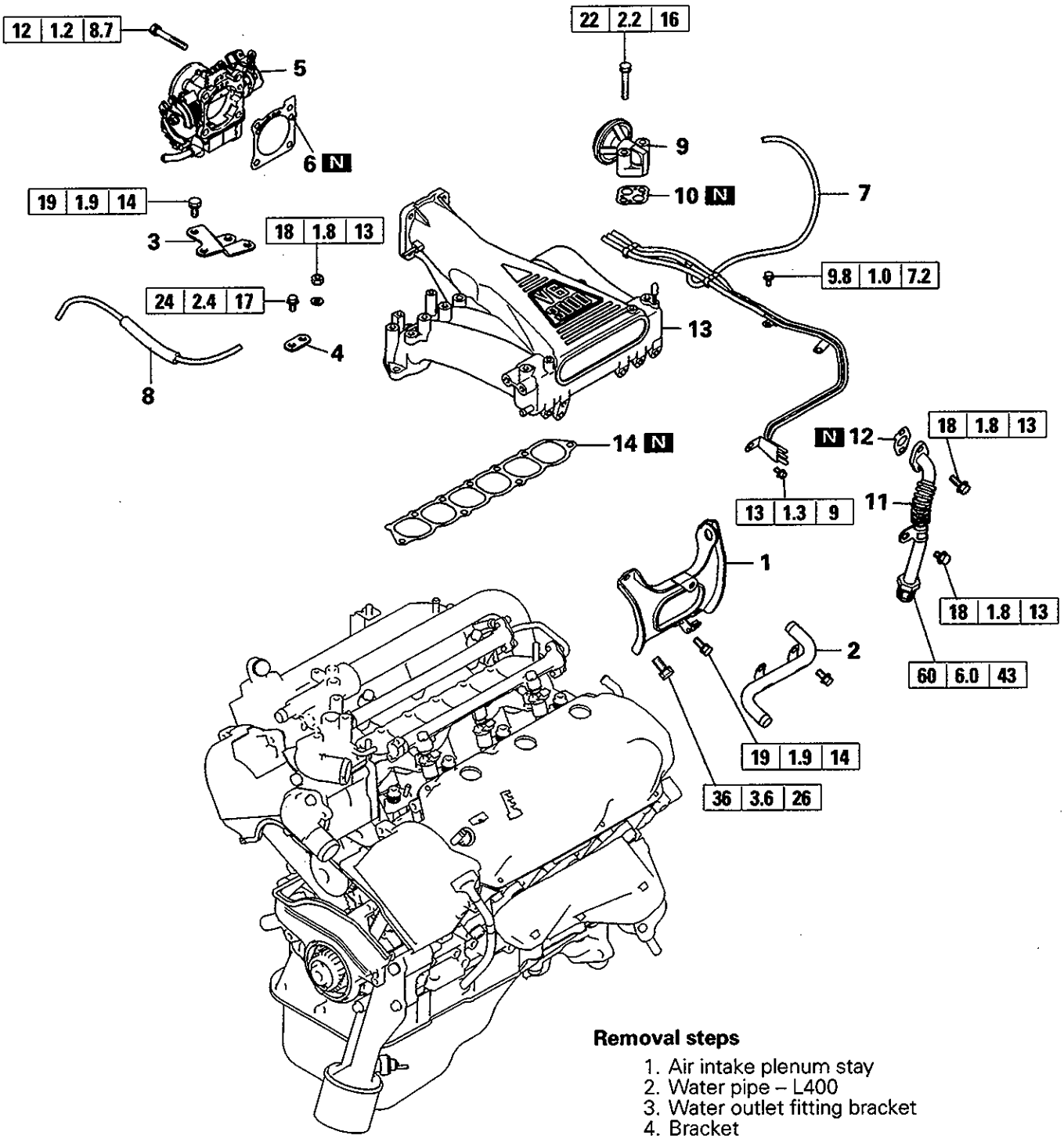

Removal steps

1. Air intake plenum stay
2. Water pipe – L400
3. Water outlet fitting bracket
4. Bracket
5. Throttle body
6. Throttle body gasket
7. Vacuum hose assembly
8. Vacuum hose
9. EGR valve
10. EGR valve gasket
11. EGR pipe
12. EGR pipe gasket

PAJERO for Europe

13. Air intake plenum
14. Air intake plenum gasket

7EN0779

© Mitsubishi Motors Corporation May 1999

REMOVAL AND INSTALLATION

(Two-camshaft 24-valve engine – 6G72 for PAJERO SPORT/CHALLENGER and L200, 6G74 for 2001 model PAJERO)

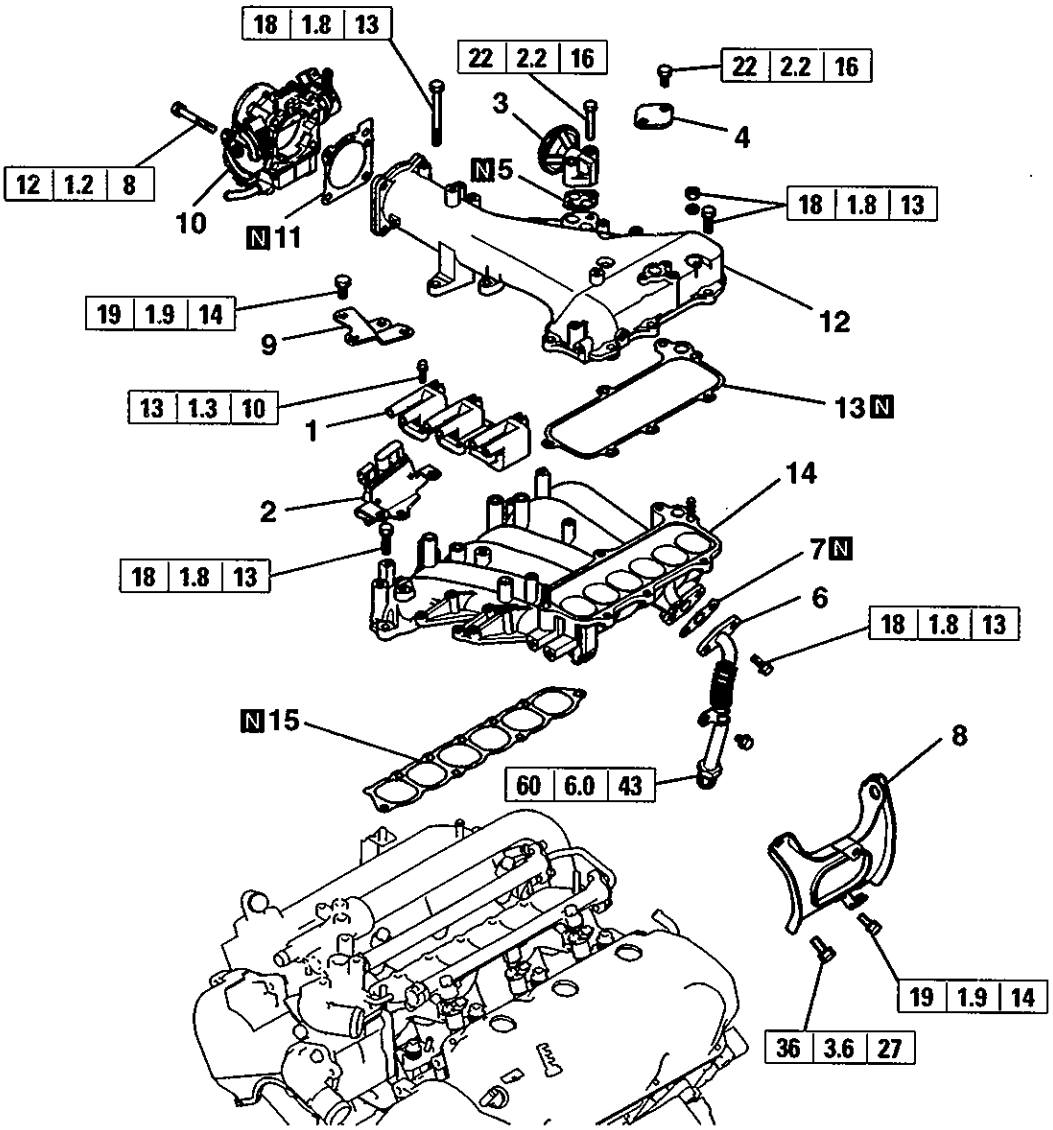

Removal steps

1. Ignition coil
2. Ignition power transistor
3. EGR valve – Vehicles for Europe, PAJERO SPORT/CHALLENGER, L200 and 2001 model PAJERO
4. Cover – Except vehicles for Europe, PAJERO SPORT/CHALLENGER, L200 and 2001 model PAJERO
5. Gasket
6. EGR pipe – Vehicles for Europe, PAJERO SPORT/CHALLENGER, L200 and 2001 model PAJERO
7. EGR pipe gasket – Vehicles for Europe, PAJERO SPORT/CHALLENGER, L200 and 2001 model PAJERO
8. Air intake plenum stay
9. Water outlet fitting bracket
10. Throttle body
11. Throttle body gasket
12. Air intake fitting
13. Intake fitting gasket
14. Intake upper manifold
15. Air intake plenum gasket

7EN1370

© Mitsubishi Motors Corporation Mar. 2000

Intentionally blank

4b.INTAKE SYSTEM, IGNITION SYSTEM (GDI)

REMOVAL AND INSTALLATION

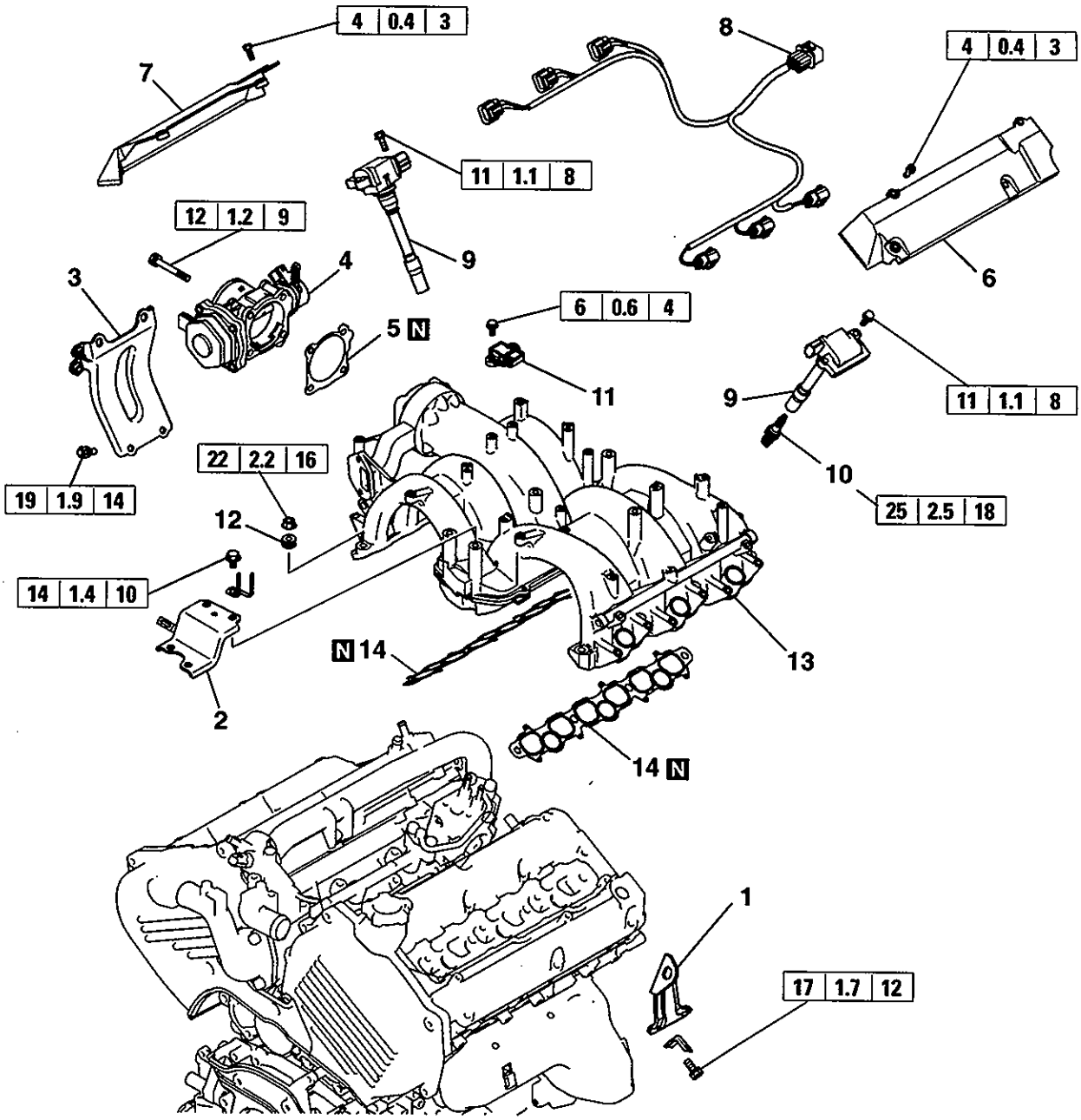

Removal steps

1. Engine hanger
2. Water outlet fitting bracket
3. Throttle body stay
4. Throttle body
◆B◆ 5. Throttle body gasket
6. Center cover, left
7. Center cover, right
8. Ignition coil harness
9. Ignition coil
10. Spark plug
11. Ignition coil failure sensor
12. Cone disc spring
◆A◆13. Intake manifold
14. Intake manifold gasket

7EN1517

© Mitsubishi Motors Corporation Mar. 2000

Added

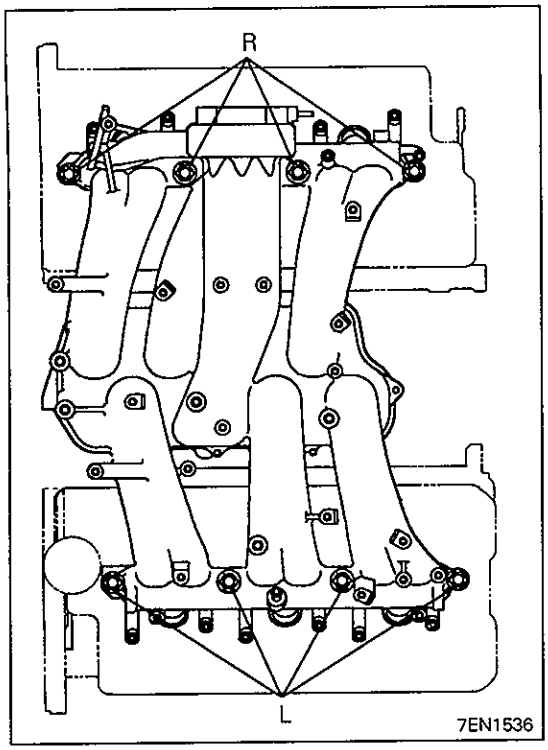

SERVICE POINTS OF INSTALLATION

◆A◆ INSTALLATION OF INTAKE MANIFOLD

Tighten the intake manifold mounting nuts in the following order.
(1) Tighten nut (L) on the left bank side to 7 Nm (0.7 kgm, 5 ft. lbs.).
(2) Tighten nut (R) on the right bank side to the specified torque.
(3) Tighten L to the specified torque.
(4) Tighten R to the specified torque.
(5) Tighten L to the specified torque.

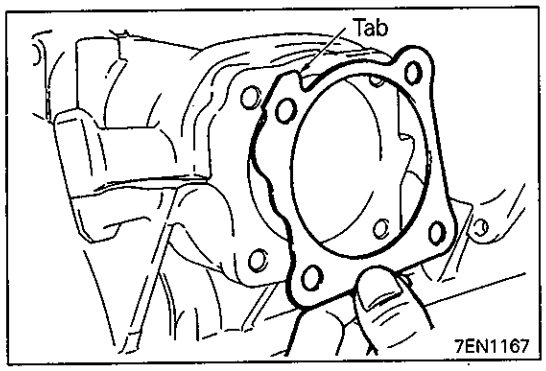

◆B◆ INSTALLATION OF THROTTLE BODY GASKET

(1) Install the throttle body gasket so that its tab is located at the position shown.

5. TIMING BELT (TWO-CAMSHAFT ENGINE)

REMOVAL AND INSTALLATION

(12-valve engine – Front wheel drive vehicle)

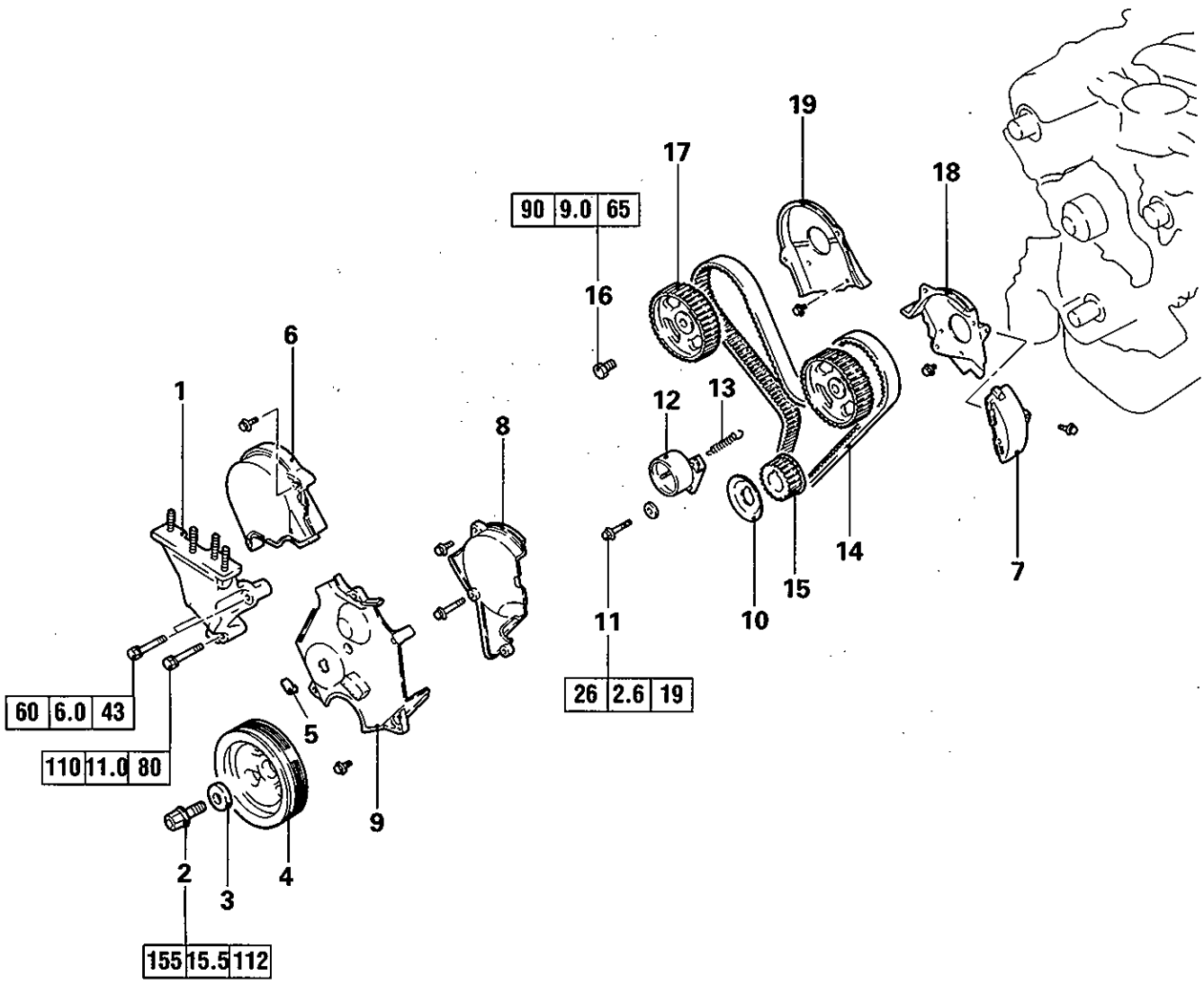

Removal steps

1. Engine support bracket
◇A◇ 2. Crankshaft pulley bolt
3. Special washer
4. Crankshaft pulley
5. Access cover
6. Timing belt front upper cover, right
7. Timing belt cover cap
8. Timing belt front upper cover, left
9. Timing belt front lower cover
10. Flange
11. Tensioner lock bolt
12. Timing belt tensioner
13. Tensioner spring
◇B◇ 14. Timing belt
15. Crankshaft sprocket
16. Camshaft sprocket bolt
17. Camshaft sprocket
18. Timing belt rear cover, left
19. Timing belt rear cover, right

Installation steps

19. Timing belt rear cover, right
18. Timing belt rear cover, left
17. Camshaft sprocket
16. Camshaft sprocket bolt
15. Crankshaft sprocket
◆A◆ 12. Timing belt tensioner
◆A◆ 13. Tensioner spring
◆C◆ 14. Timing belt
11. Tensioner lock bolt
10. Flange
9. Timing belt front lower cover
8. Timing belt front upper cover, left
7. Timing belt cover cap
6. Timing belt front upper cover, right
5. Access cover
4. Crankshaft pulley
3. Special washer
◆E◆ 2. Crankshaft pulley bolt
1. Engine support bracket

7EN0357

© Mitsubishi Motors Corporation Aug. 1994

REMOVAL AND INSTALLATION

(12-valve engine – Rear wheel drive vehicle)

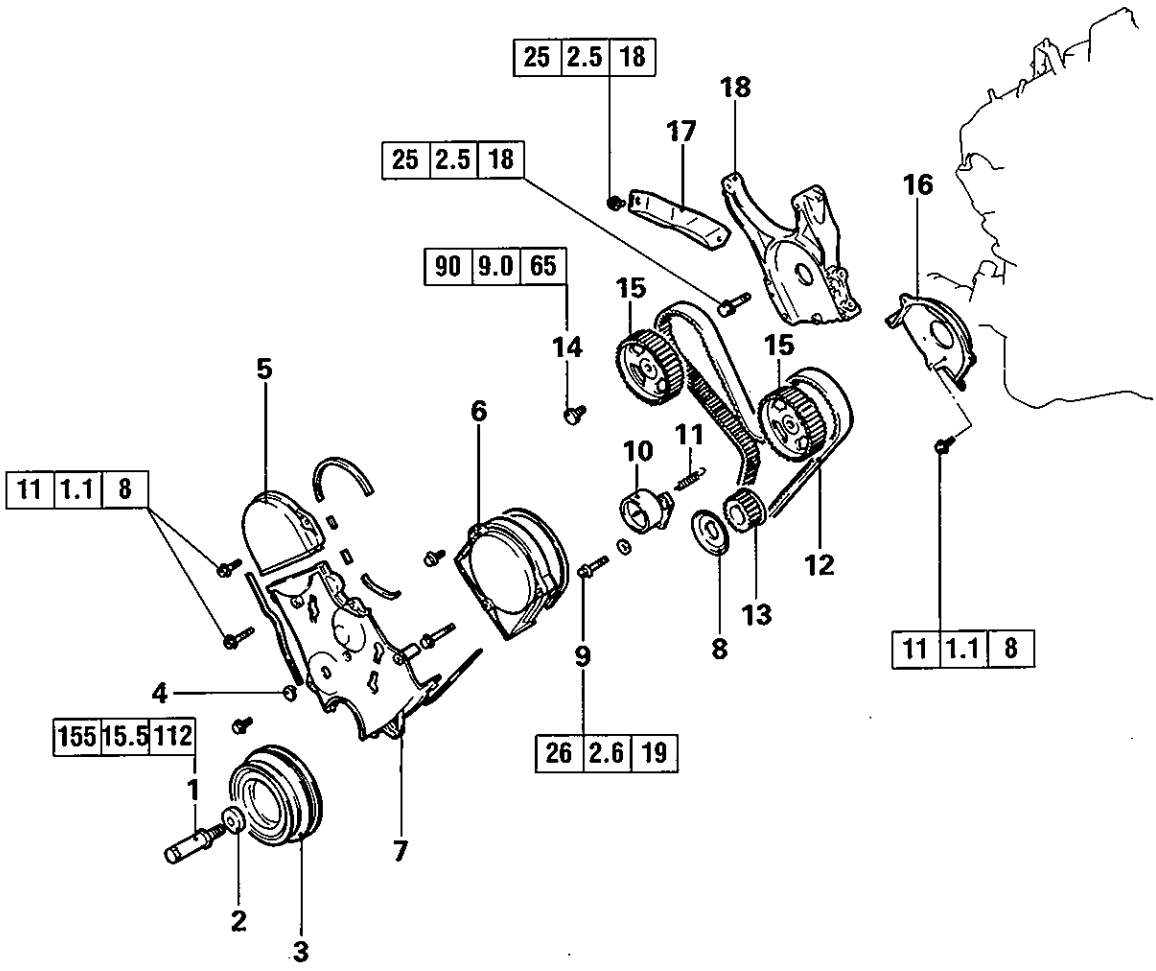

Removal steps

1. Crankshaft pulley bolt
2. Special washer
◇A◇ 3. Crankshaft pulley
4. Access cover
5. Timing belt front upper cover, right
6. Timing belt front upper cover, left
7. Timing belt front lower cover
8. Flange
9. Tensioner lock bolt
10. Timing belt tensioner
11. Tensioner spring
◇B◇ 12. Timing belt
13. Crankshaft sprocket
14. Camshaft sprocket bolt
15. Camshaft sprocket
16. Timing belt rear upper cover, left
17. Alternator stay
18. Alternator bracket

Installation steps

18. Alternator bracket
17. Alternator stay
16. Timing belt rear upper cover, left
15. Camshaft sprocket
14. Camshaft sprocket bolt
13. Crankshaft sprocket
▶A◀ 10. Timing belt tensioner
▶A◀ 11. Tensioner spring
▶C◀ 12. Timing belt
9. Tensioner lock bolt
8. Flange
7. Timing belt front lower cover
6. Timing belt front upper cover, left
5. Timing belt front upper cover, right
4. Access cover
3. Crankshaft pulley
2. Special washer
▶E◀ 1. Crankshaft pulley bolt

7EN0358

© Mitsubishi Motors Corporation Aug. 1994

REMOVAL AND INSTALLATION

(24-valve engine)

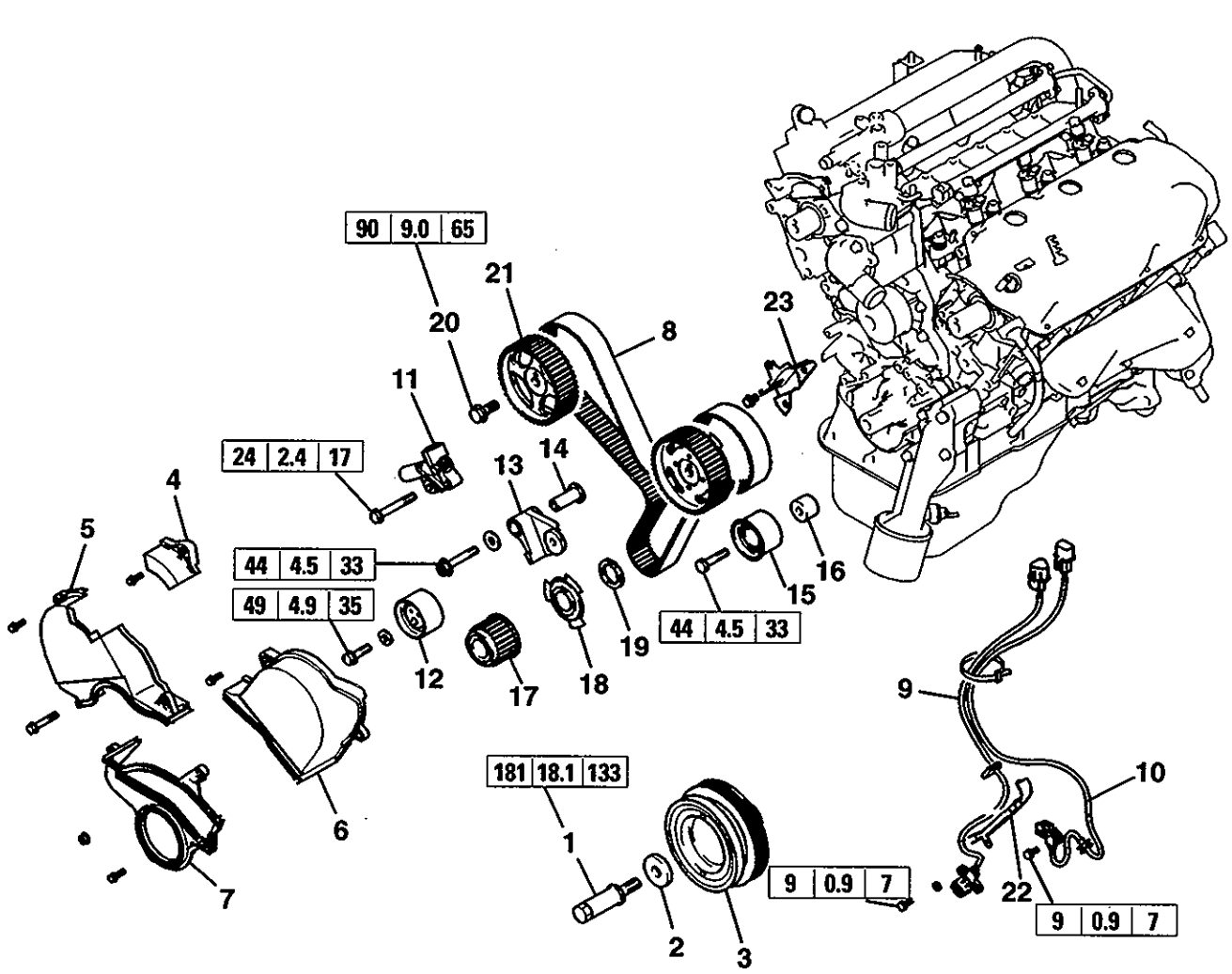

Removal steps

- ◇A◇ ▶E◀ 1. Crankshaft bolt
- 2. Special washer
- 3. Damper pulley
- 4. Timing belt cover cap
- 5. Timing belt front upper cover, right
- 6. Timing belt front upper cover, left
- 7. Timing belt front lower cover
- ◇B◇ ▶D◀ 8. Timing belt
- 9. Crankshaft position sensor
- 10. Camshaft position sensor
- ▶B◀ 11. Auto tensioner
- 12. Tensioner pulley
- 13. Tensioner arm
- 14. Shaft
- 15. Idler pulley
- 16. Idler pulley spacer
- 17. Crankshaft sprocket
- 18. Crankshaft sensing plate
- 19. Crankshaft spacer
- ◇D◇ ▶F◀ 20. Camshaft sprocket bolt
- 21. Camshaft sprocket
- 22. Harness protector
- 23. Timing belt rear cover

7EN1371

© Mitsubishi Motors Corporation Mar. 2000

REMOVAL AND INSTALLATION

(2001 model PAJERO)

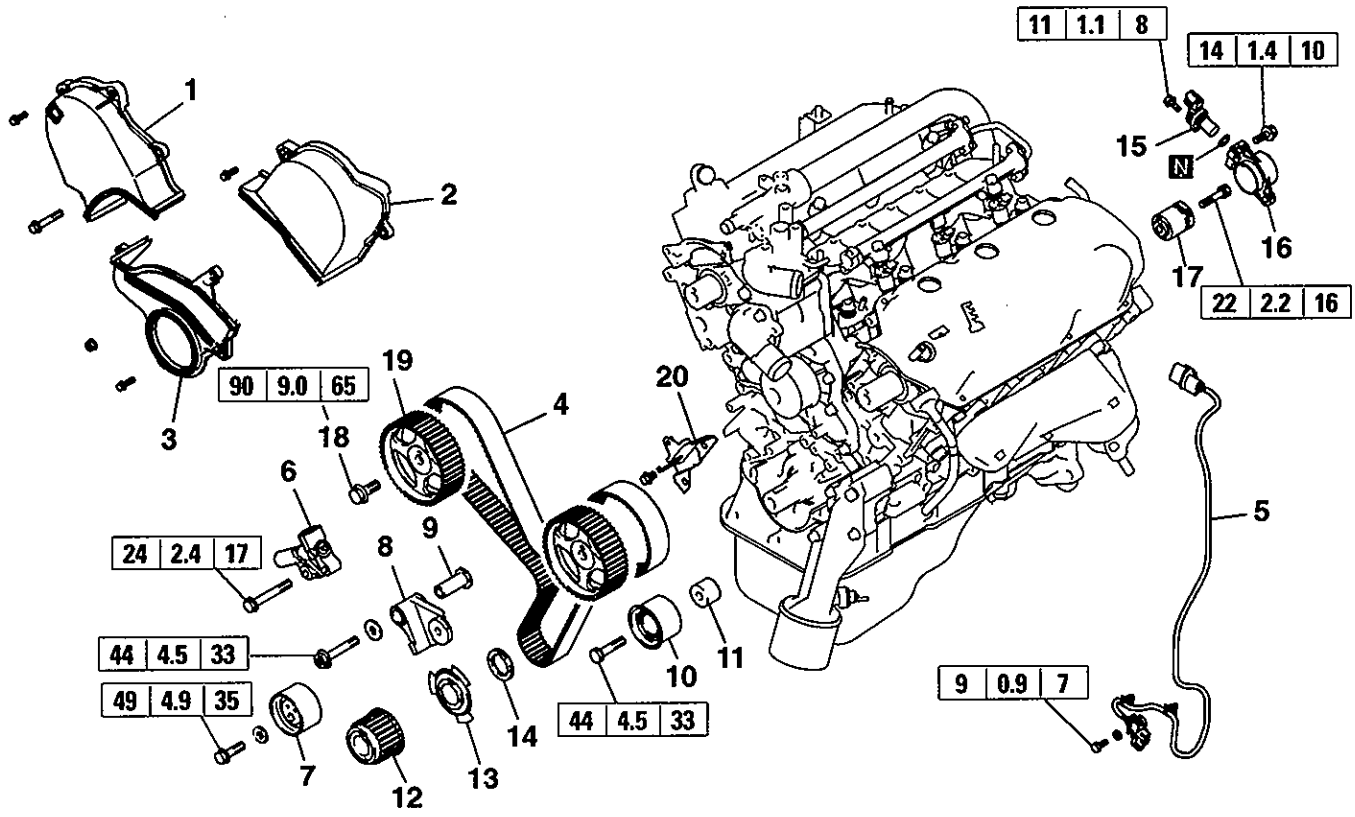

Removal steps

1. Timing belt front upper cover, right
2. Timing belt front upper cover, left
3. Timing belt front lower cover
◇B◇ ◆D◆ 4. Timing belt
5. Crankshaft position sensor
◆B◆ 6. Auto tensioner
7. Tensioner pulley
8. Tensioner arm
9. Shaft
10. Idler pulley
11. Idler pulley spacer
12. Crankshaft sprocket
13. Crankshaft sensing plate
14. Crankshaft spacer
15. Camshaft position sensor
16. Camshaft position sensor support
◇C◇ ◆G◆ 17. Camshaft position sensor sensing cylinder
◇D◇ ◆F◆ 18. Camshaft sprocket bolt
19. Camshaft sprocket
20. Timing belt rear cover

7EN1563

© Mitsubishi Motors Corporation Mar. 2000

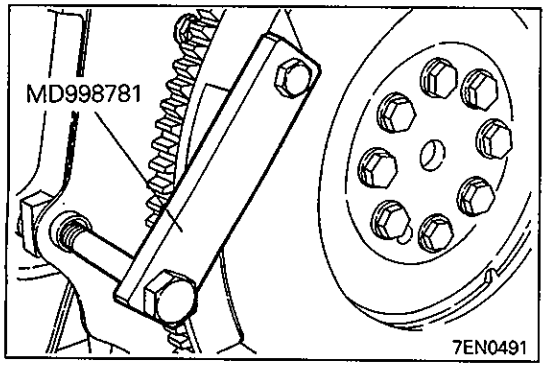

SERVICE POINTS OF DISASSEMBLY

⟨A⟩ REMOVAL OF CRANKSHAFT PULLEY BOLT

(1) Using the special tool, hold the drive plate or flywheel.
(2) Remove the crankshaft bolt.

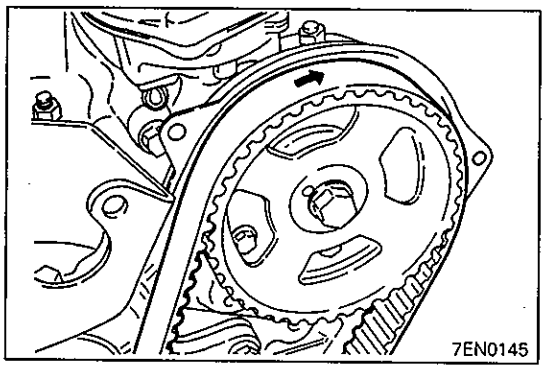

⟨B⟩ REMOVAL OF TIMING BELT

(1) When the timing belt is to be reused, in order to allow reinstallation of the belt so that it travels in the same direction as before it was removed, mark the direction of travel with an arrow before removing it.

Caution

- **As water or oil on the belt can seriously reduce its usable life, ensure that the timing belt, sprocket, and tensioner stay clean and dry while removed, and never wash them. Parts that have become too dirty should be replaced.**
- **When any of the parts are oily, check to see whether there are any oil leaks in any of the oil seals or the camshaft oil seal on the front of the engine.**

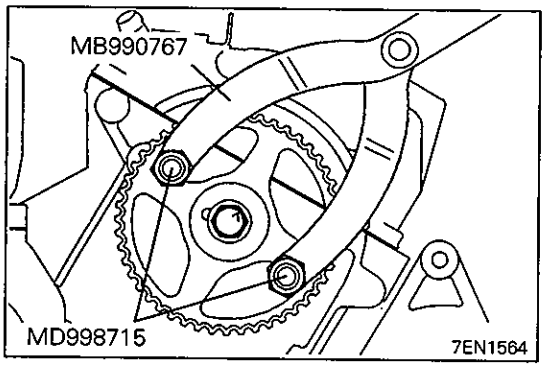

⟨C⟩ REMOVAL OF CAMSHAFT POSITION SENSOR SENSING CYLINDER

(1) With the camshaft sprocket locked in position using the special tool, remove the camshaft position sensor sensing cylinder.

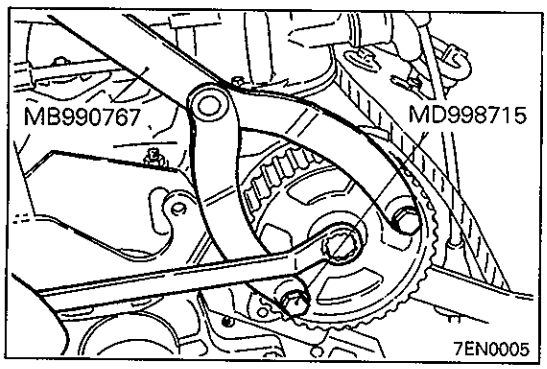

⟨D⟩ REMOVAL OF CAMSHAFT SPROCKET BOLT

© Mitsubishi Motors Corporation Mar. 2000

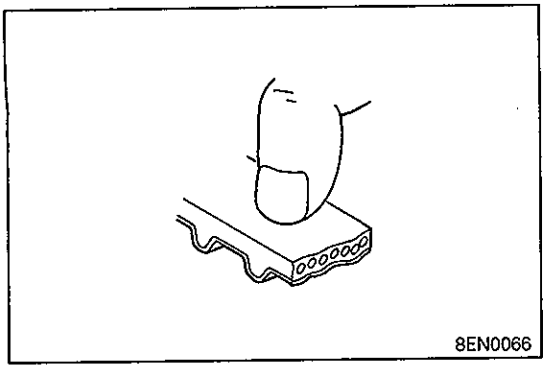

INSPECTION

TIMING BELT

Check the belt in detail. If the following is evident, replace belt with a new one.

(1) Hardened back surface rubber
Back surface glossy, non-elastic and so hard that even if a finger nail is forced into it, no mark is produced.

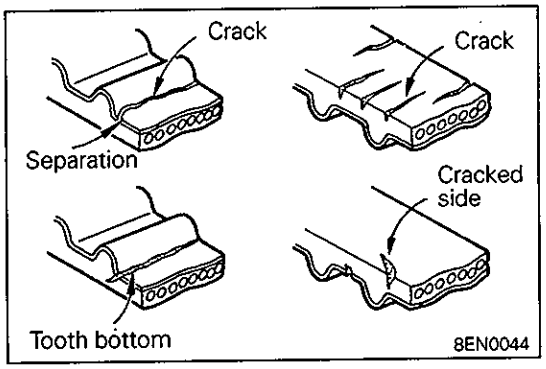

(2) Cracked back surface rubber.
(3) Cracked or separated canvas.
(4) Cracked tooth bottom.
(5) Cracked side of belt.

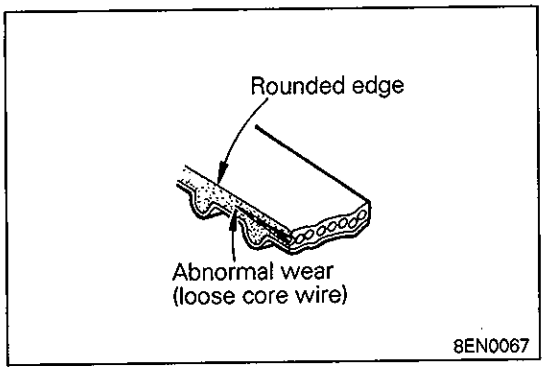

(6) Side of belt badly worn.

NOTE
Normal belt should have clear-cut sides as if cut with a sharp knife.

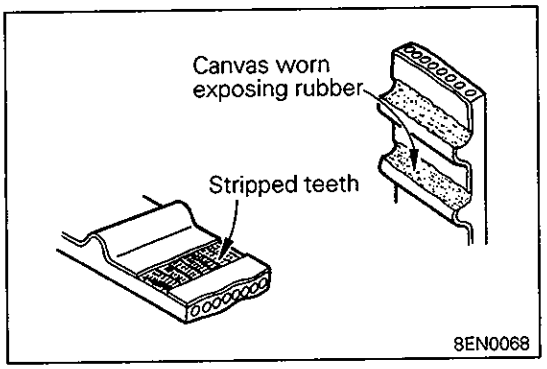

(7) Badly worn teeth.
Initial stage:
Canvas is worn (fluffy canvas fibers are visible, rubber is gone and color has changed to white. Canvas texture is not clear.)
Last stage:
Canvas is worn out and rubber exposed and its width is reduced.

(8) Missing tooth.

AUTO-TENSIONER

Refer to "INSPECTION" on page 11A-6-6.

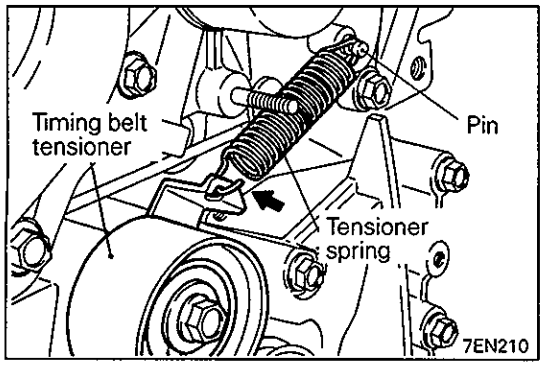

SERVICE POINTS OF REASSEMBLY

◆A◆ INSTALLATION OF TIMING BELT TENSIONER / TENSIONER SPRING

(1) Install the timing belt tensioner and tighten the lock bolt by fingers.
(2) Hook the tension spring to the pin above the water pump case and to the tensioner. Note the direction of the hook on the tensioner side.

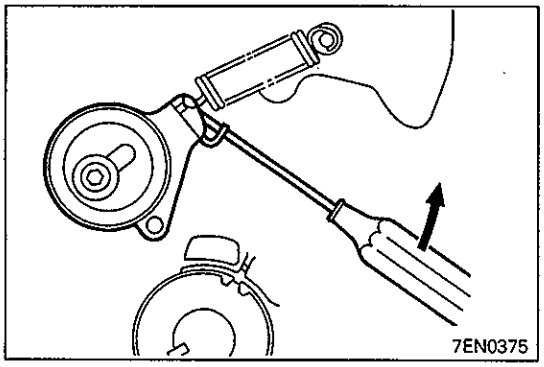

(3) Insert a screwdriver or similar tool into the hole of the timing belt tensioner arm, move it all the way in the direction of the arrow, and tighten the tensioner bolt.

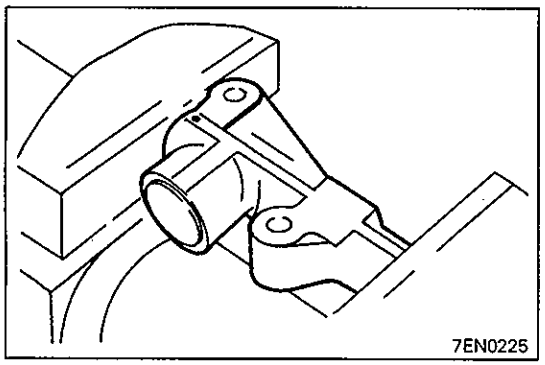

◆B◆ INSTALLATION OF AUTO-TENSIONER

(1) If the auto-tensioner rod is fully extended, set it in the retracted position with the following procedure.
  ① Set the auto-tensioner in a vice, while making sure it is not tilted.

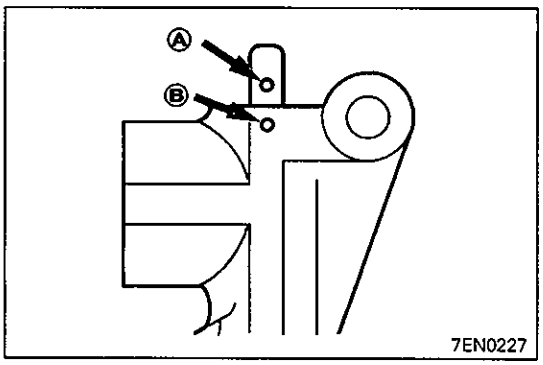

  ② Slowly close the vice to force the rod in until the set hole (A) of the rod is lined up with the set hole (B) of the cylinder.
  ③ Insert a metal wire [1.4 mm (0.055 in.) in diameter] into the set holes.
  ④ Remove the auto tensioner from the vice.
(2) On engines with turbocharger, apply sealant to the threads of the auto tensioner mounting bolt.

Specified sealant: 3MATD Part No. 8660 or equivalent

(3) Install the auto tensioner on the cylinder block through the oil pump case.

◆C◆ INSTALLATION OF TIMING BELT

(1) Align the timing marks of the camshaft sprockets and the crankshaft sprocket.
(2) First, route the timing belt on the crankshaft sprocket, then on the camshaft sprocket of the left bank side without slackness in the tension side.
(3) Next, run the timing belt onto the water pump pulley, the camshaft sprocket on the right bank side, and the timing belt tensioner.

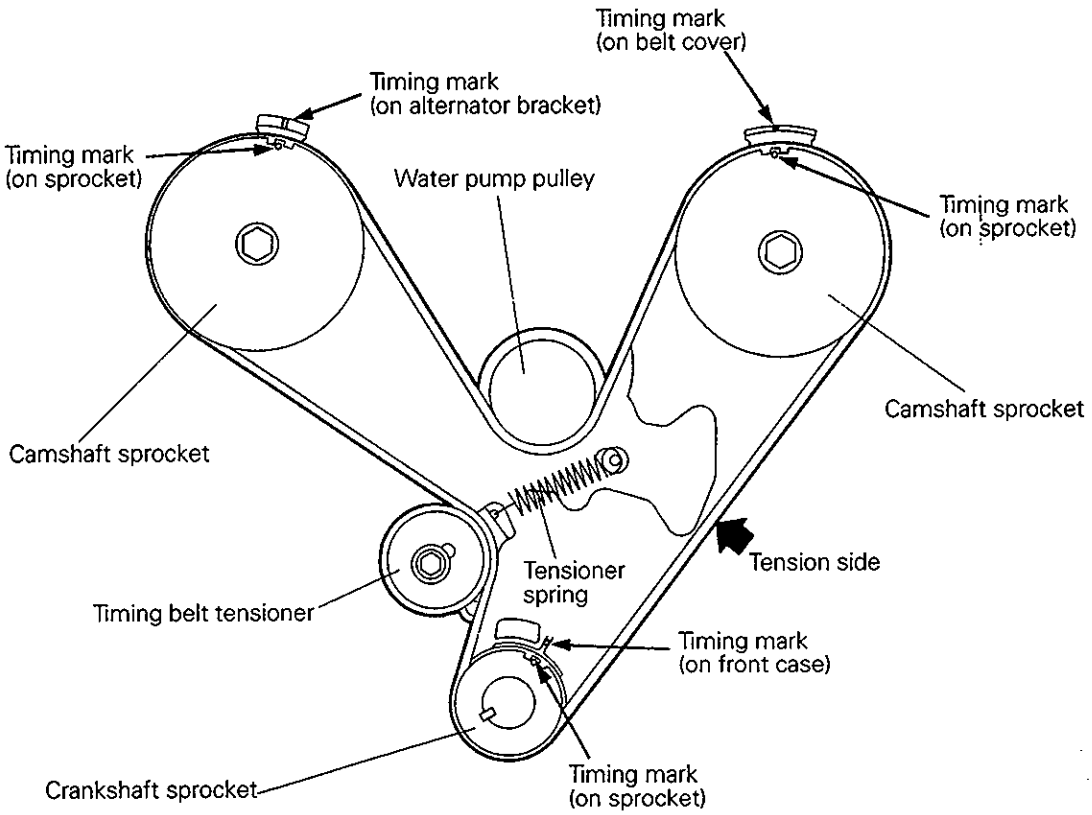

7EN0007

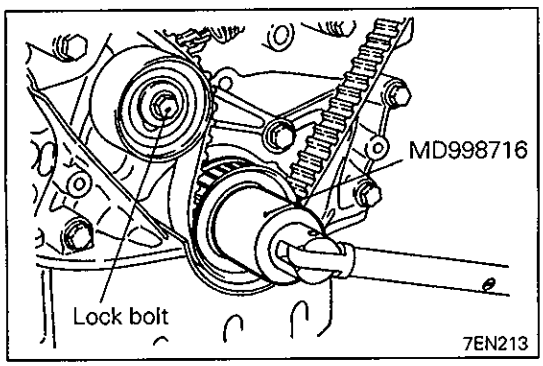

(4) Back off the tensioner lock bolt one or two turns.
(5) Install the flange onto the front end of crankshaft.
(6) Install the special tool onto the crankshaft.
(7) Turn the crankshaft clockwise smoothly two turns.
(8) Tighten the tensioner lock nut to specified torque.

© Mitsubishi Motors Corporation Mar. 2000

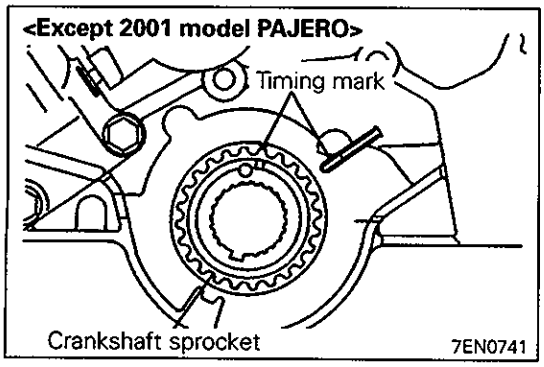

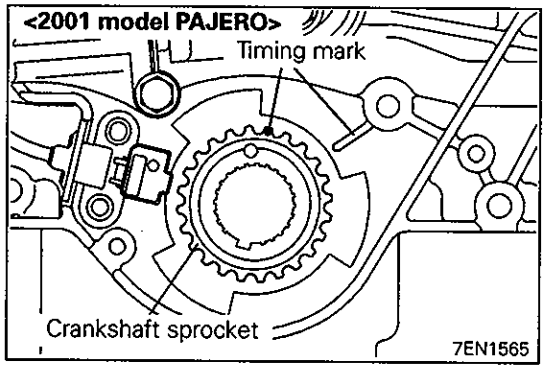

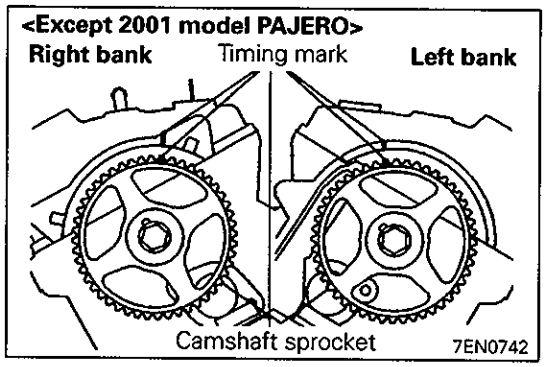

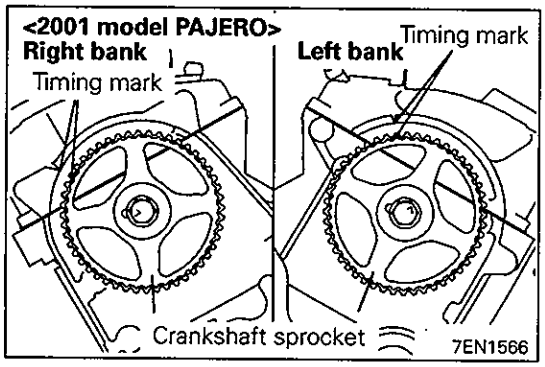

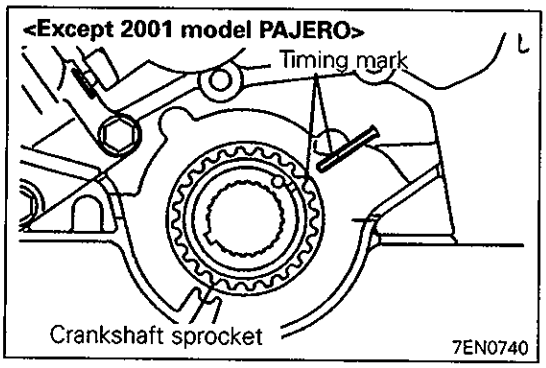

◆D◆ INSTALLATION OF TIMING BELT

(1) Turn the crankshaft sprocket to position its timing mark 3 teeth away from the timing mark on the crankcase. (That is, slightly lower the No. 1 piston from the top dead center on the compression stroke.)

Caution

- **If the camshaft sprocket is turned with the piston at the top dead center on the compression stroke, valves may interfere with the piston.**

(2) Align the timing marks for the left bank camshaft sprocket.
(3) Align the timing marks for the right bank camshaft sprocket.

Caution

- **The camshaft sprocket may turn unintentionally due to the valve spring tension. Take care not to injure your fingers.**

(4) Align timing marks for the crankshaft sprocket.
(5) Install the timing belt over the sprockets in the following procedure.
  1) Place the timing belt over the crankshaft. While giving tension to the belt, set it over the idler pulley.
  2) Place the belt over the left bank camshaft sprocket.
  3) While giving tension to the belt, place it over the water pump pulley.
  4) Place the belt over the right bank camshaft sprocket.
  5) Place the belt over the tensioner pulley.
(6) While pressing the tensioner pulley lightly against the timing belt, temporarily tighten its center bolt.
(7) Check that all timing marks are in alignment.

© Mitsubishi Motors Corporation Mar. 2000

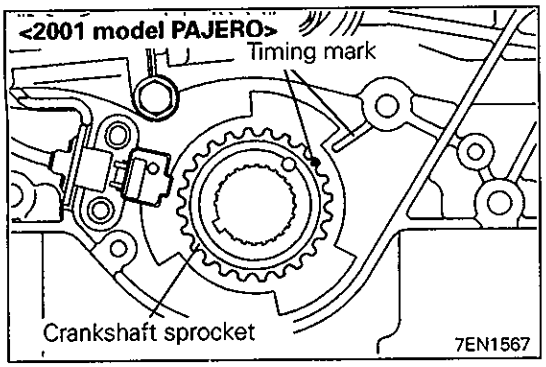

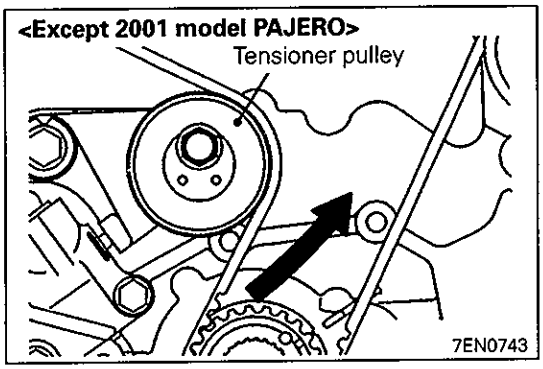

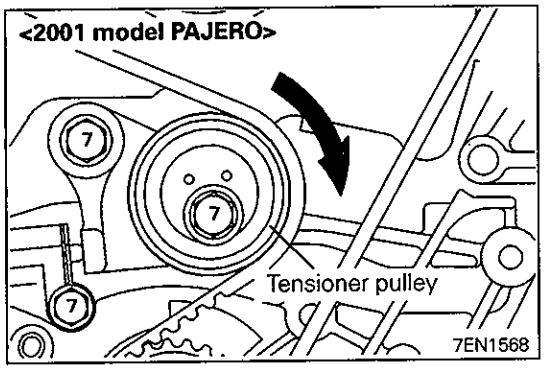

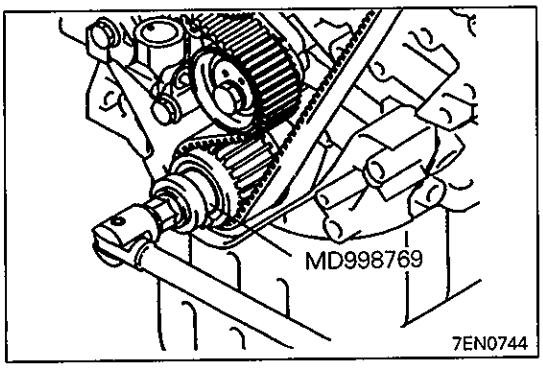

(8) Using the special tool, turn the crankshaft counter-clockwise a quarter turn, then turn it clockwise and align the timing marks. Make sure that all timing marks are in alignment.

<Except 2001 model PAJERO>

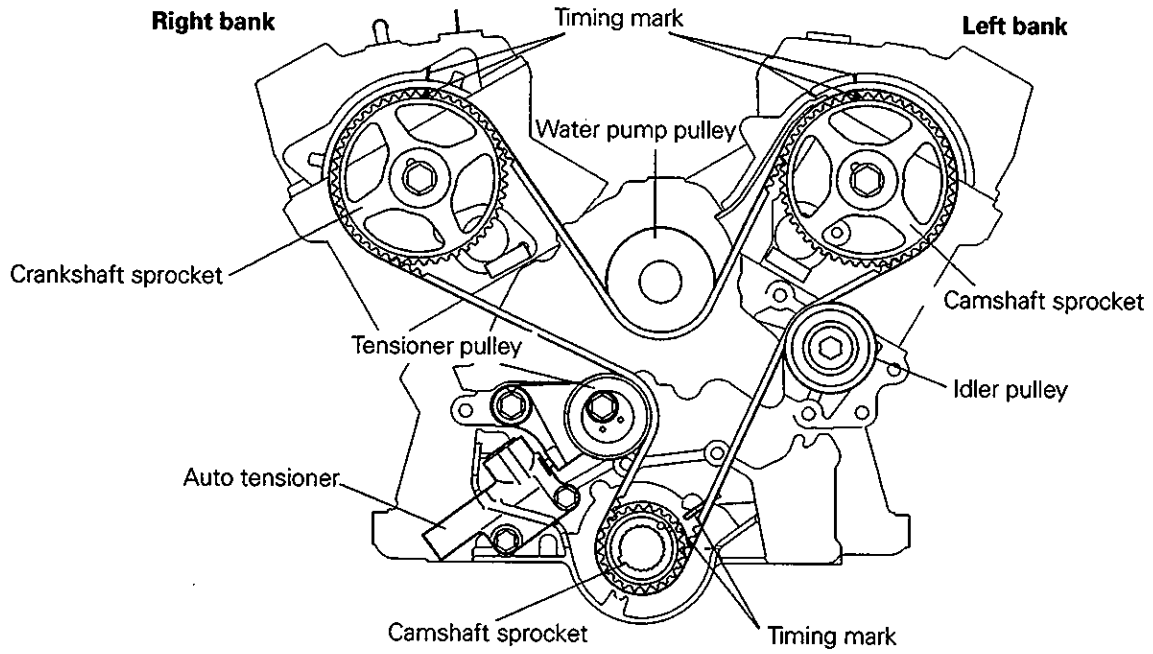

7EN0745

<2001 model PAJERO>

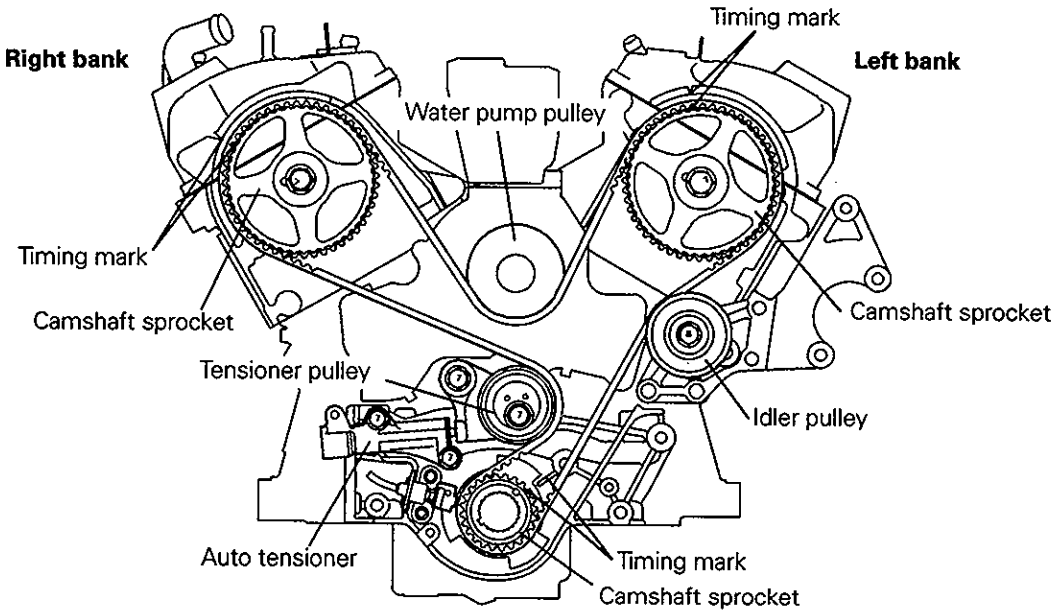

7EN1569

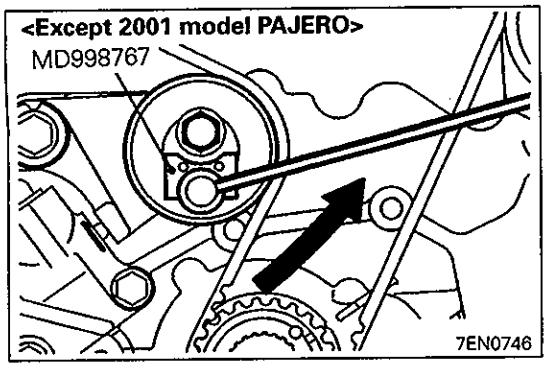

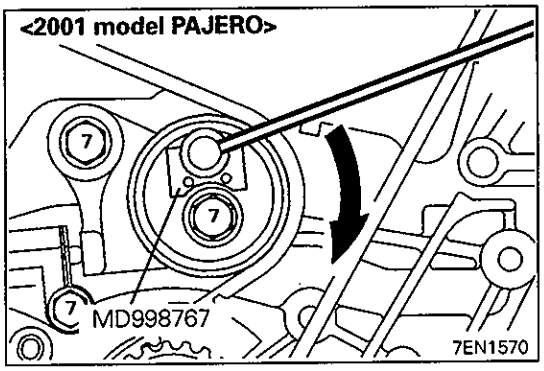

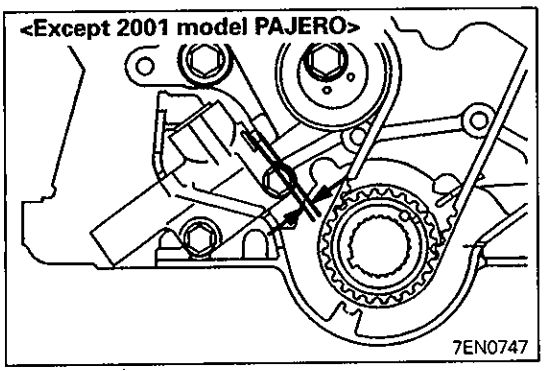

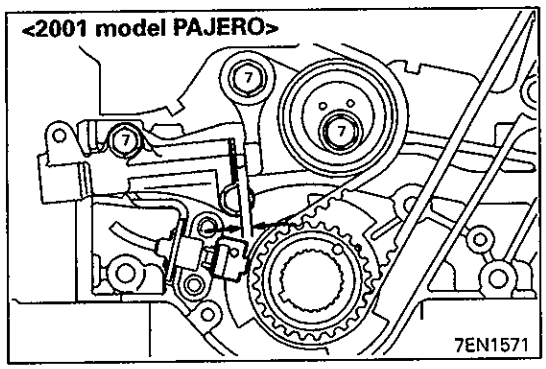

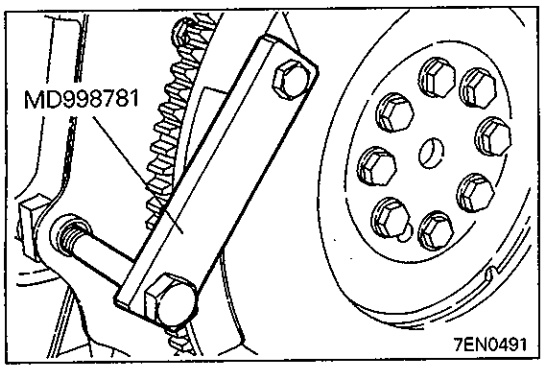

(9) Set the special tool and a torque wrench on the tensioner pulley.
(10) Torque the tensioner pulley to 4.4 Nm (0.45 kgfm, 3.2 ft.lbs).
(11) While holding the tensioner pulley, tighten its center bolt to the specified torque.
(12) Turn the crankshaft 2 turns clockwise and let it stand for approx. 5 minutes.
(13) Remove the wire, which has been inserted when installing the tensioner, from the auto tensioner. If it is removed easily, the timing belt tension is correct. Make sure that the auto tensioner rod projection is within specification.

Standard value:
3.8 – 4.5 mm (0.150 – 0.177 in.)
<Except 2001 model PAJERO>
4.8 – 5.5 mm (0.189 – 0.217 in.)
<2001 model PAJERO>

(14) If the wire cannot be removed easily or the rod protrusion is not up to specification, repeat steps (9) through (12) to obtain the correct tension.

◆E◆ TIGHTENING OF CRANKSHAFT PULLEY BOLT

(1) Using the special tool, hold the drive plate or flywheel.
(2) Install the crankshaft bolt.

© Mitsubishi Motors Corporation Mar. 2000

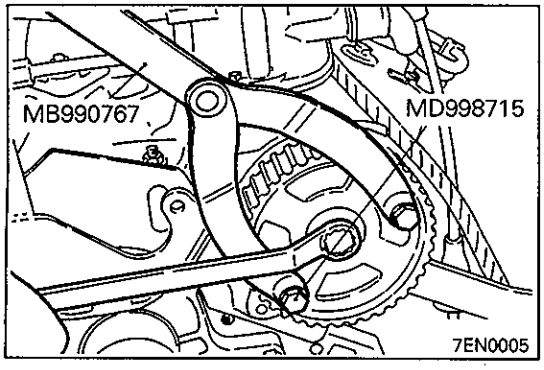

◆F◆ INSTALLATION OF CAMSHAFT SPROCKET BOLT

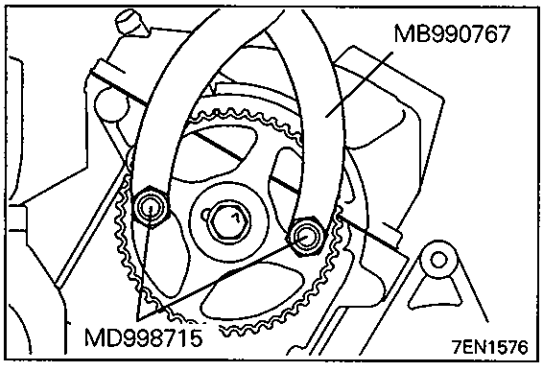

◆G◆ INSTALLATION OF CAMSHAFT POSITION SENSOR SENSING CYLINDER

(1) With the camshaft sprocket locked in position using the special tool, install the camshaft position sensor sensing cylinder.

6. TIMING BELT (FOUR-CAMSHAFT ENGINE)

REMOVAL AND INSTALLATION

(Front wheel drive vehicle)

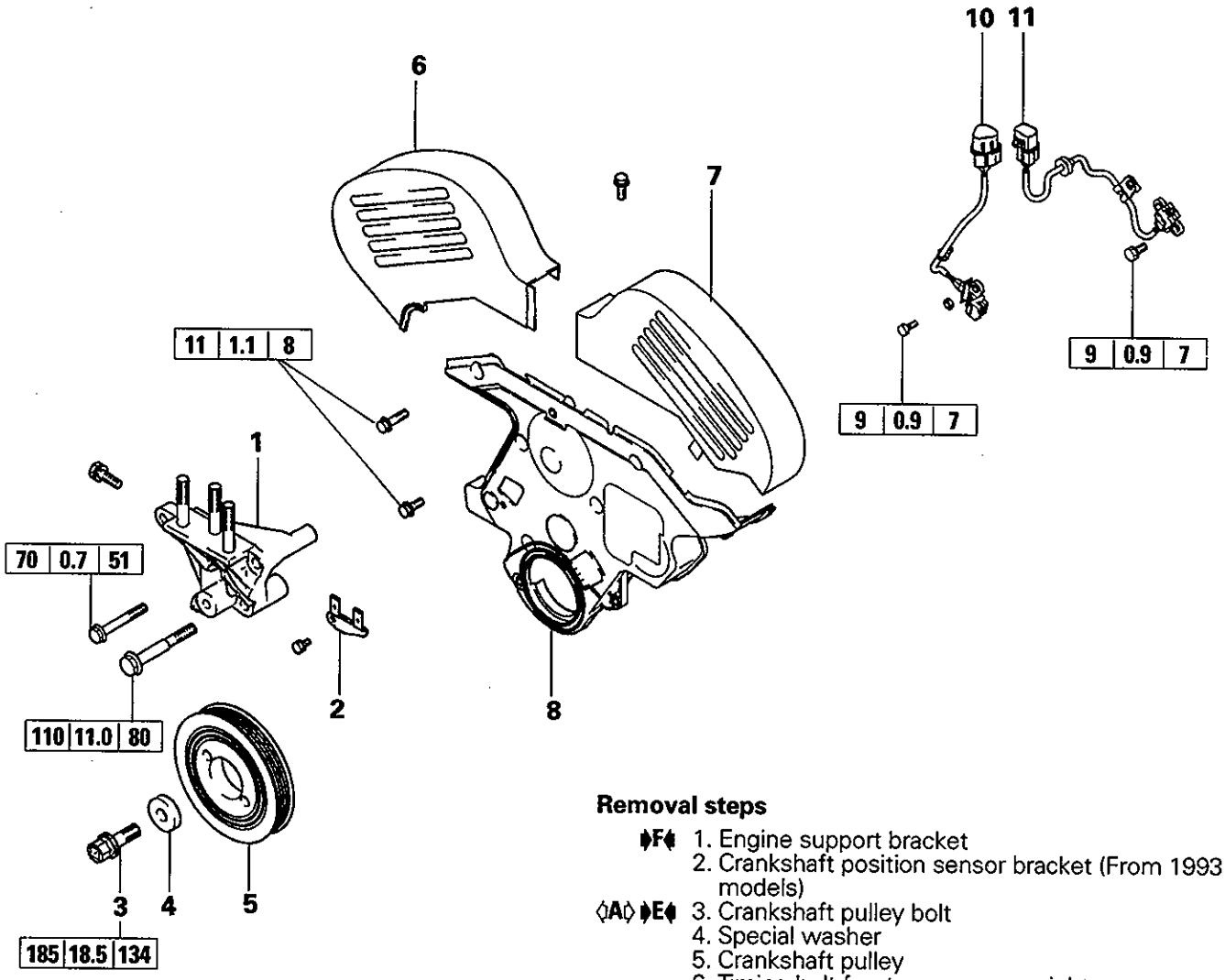

Removal steps

- ◗F◖ 1. Engine support bracket
- 2. Crankshaft position sensor bracket (From 1993 models)
- ◊A◊ ◗E◖ 3. Crankshaft pulley bolt
- 4. Special washer
- 5. Crankshaft pulley
- 6. Timing belt front upper cover, right
- 7. Timing belt front upper cover, left
- 8. Timing belt front lower cover
- ◊B◊ ◗D◖ 9. Timing belt
- 10. Crankshaft position sensor (From 1993 models)
- 11. Camshaft position sensor (From 1993 models)
- ◗B◖ 12. Auto tensioner
- 13. Tensioner pulley
- 14. Tensioner arm assembly
- 15. Idler pulley
- 16. Idler pulley bracket
- 17. Crankshaft sprocket
- 18. Sensing plate (From 1993 models)
- 19. Washer (From 1993 models)
- ◗C◖ 20. Rocker cover
- 21. Rocker cover gasket, A
- 22. Rocker cover gasket, B
- ◊C◊ ◗A◖ 23. Camshaft sprocket bolt
- 24. Camshaft sprocket
- 25. Timing belt rear cover, right
- 26. Timing belt rear cover, left
- 27. Bracket
- 28. Timing belt rear cover, center

7EN0585

© Mitsubishi Motors Corporation Mar. 2000

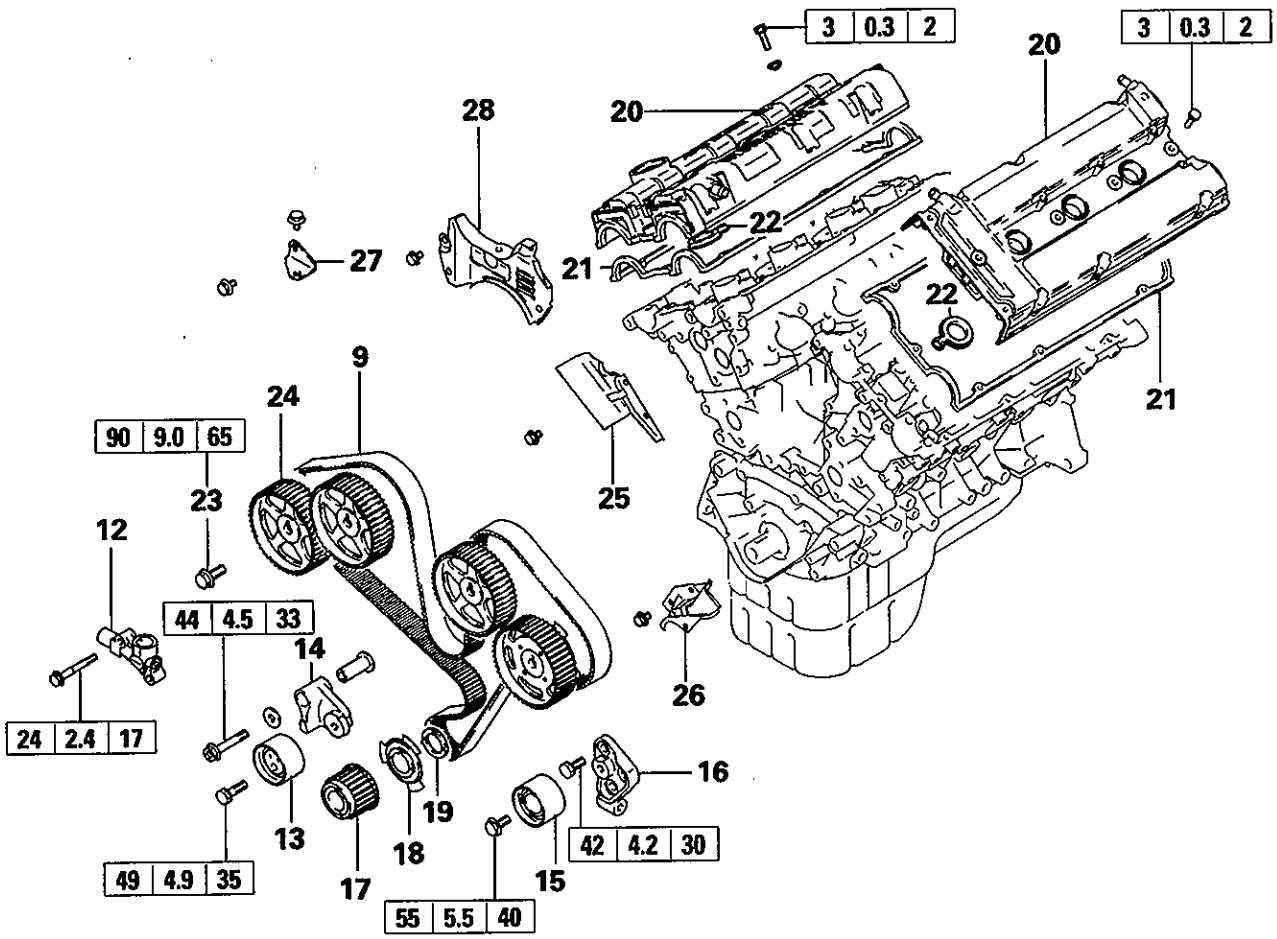

7EN0586

© Mitsubishi Motors Corporation Dec. 1993

REMOVAL AND INSTALLATION

(Rear wheel drive vehicle)

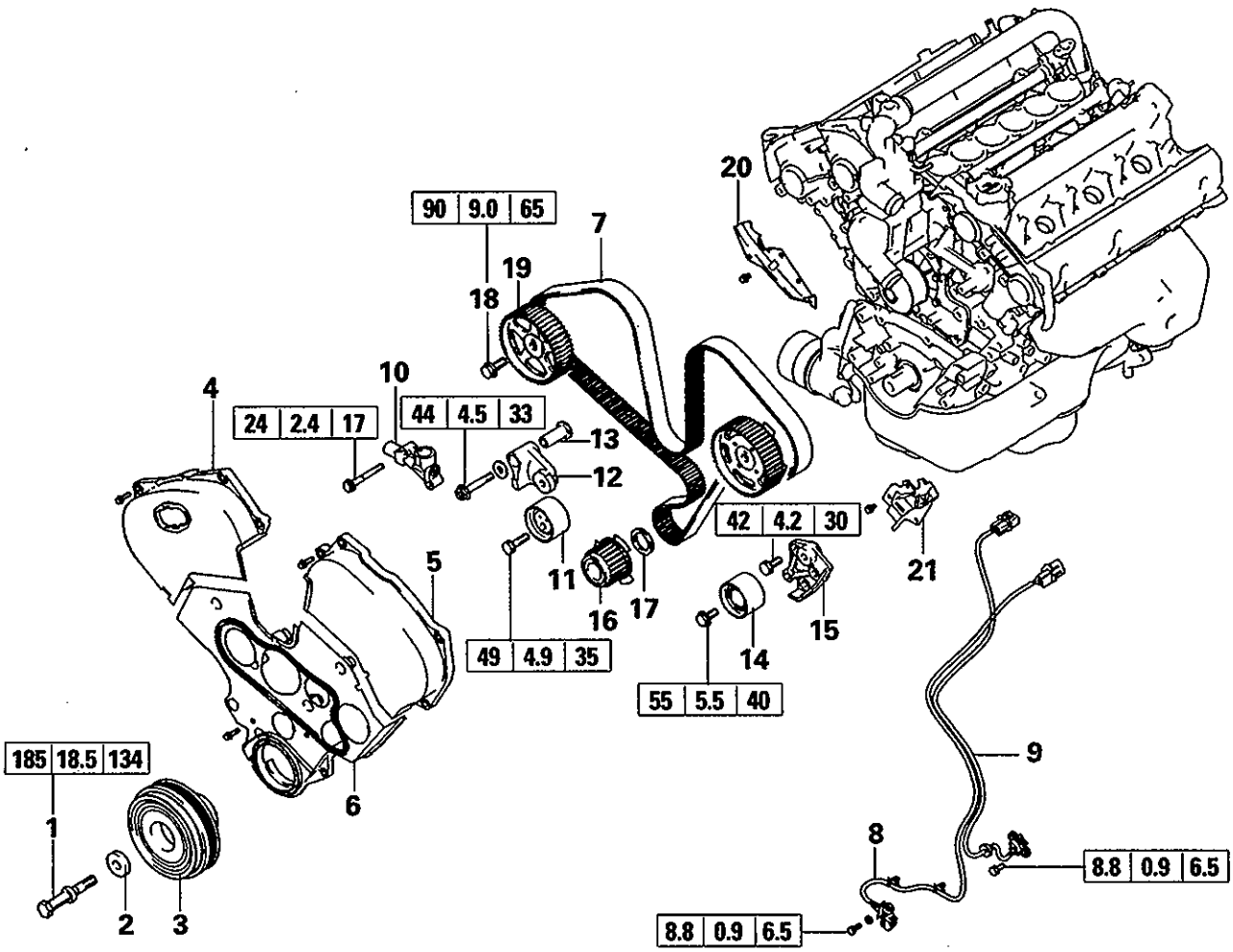

Removal steps

◇A◇ ◆E◆ 1. Crankshaft pulley bolt
2. Crankshaft pulley washer
3. Damper pulley
4. Timing belt front upper cover, right
5. Timing belt front upper cover, left
6. Timing belt front lower cover

◇B◇ ◆D◆ 7. Timing belt
8. Crankshaft position sensor
9. Camshaft position sensor

◆B◆ 10. Auto tensioner
11. Tensioner pulley
12. Tensioner arm
13. Shaft
14. Idler pulley
15. Idler pulley bracket
16. Crankshaft sprocket assembly
17. Crankshaft spacer

◇C◇ ◆A◆ 18. Camshaft sprocket bolt
19. Camshaft sprocket
20. Timing belt rear cover, right
21. Timing belt rear cover, left

7EN0682

© Mitsubishi Motors Corporation Mar. 2000

REMOVAL AND INSTALLATION

(GDI)

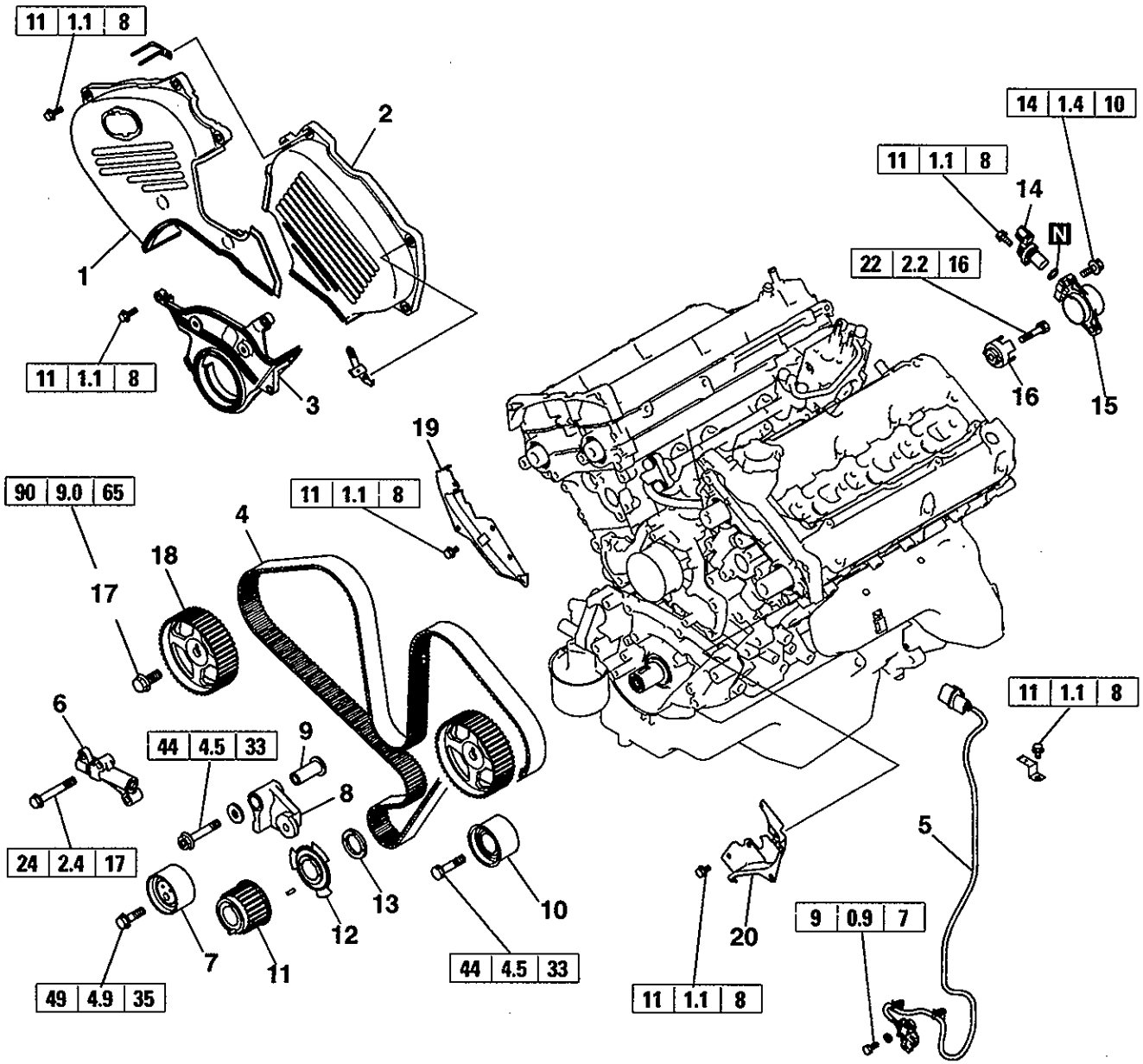

Removal steps

1. Timing belt front upper cover, right
2. Timing belt front upper cover, left
3. Timing belt front lower cover
◇B◇ ◆H◆ 4. Timing belt
5. Crankshaft position sensor
◆B◆ 6. Auto tensioner
7. Tensioner pulley
8. Tensioner arm
9. Shaft
10. Idler pulley
11. Crankshaft sprocket
12. Sensing plate
13. Spacer
14. Camshaft position sensor
15. Camshaft position sensor support
◇D◇ ◆G◆ 16. Camshaft position sensor sensing cylinder
◇C◇ ◆A◆ 17. Camshaft sprocket bolt
18. Camshaft sprocket
19. Timing belt rear cover, right
20. Timing belt rear cover, left

7EN1572

© Mitsubishi Motors Corporation Mar. 2000

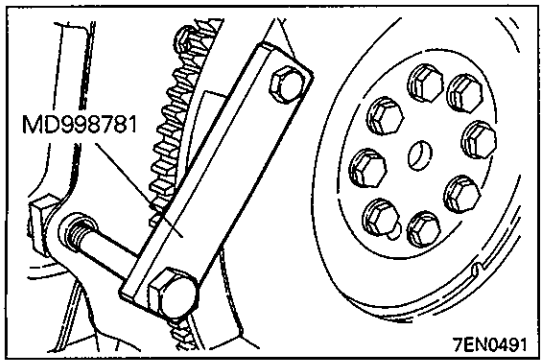

SERVICE POINTS OF REMOVAL

◇A◇ REMOVAL OF CRANKSHAFT PULLEY BOLT

(1) Using the special tool, hold the drive plate or flywheel.
(2) Remove the crankshaft bolt.

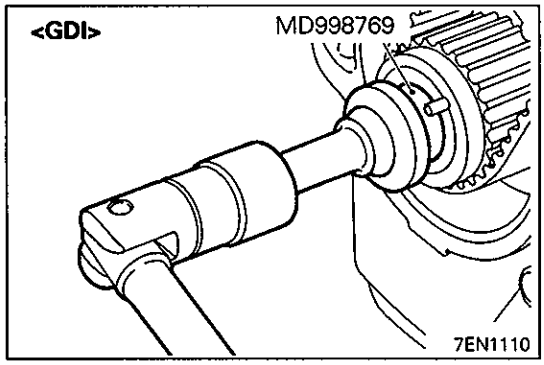

◇B◇ REMOVAL OF TIMING BELT

(1) Turn the crankshaft to bring the piston in No. 1 cylinder to its TDC on the compression stroke. <GDI>

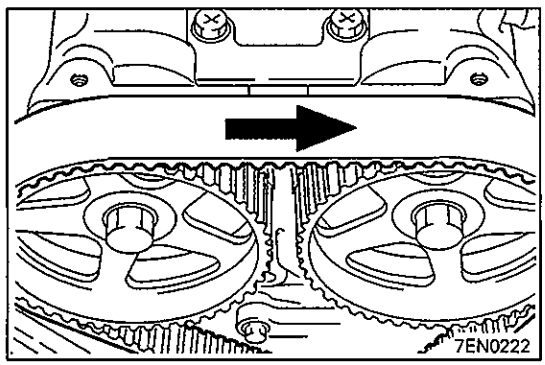

(2) If reusing the timing belt, use a chalk to draw an arrow on back of the timing belt to indicate rotation direction.

NOTE
(1) Water or oil on the belt shortens its life drastically, so the removed timing belt, sprocket, and tensioner must be kept free from oil and water. Do not immerse parts in cleaning solvent.
(2) If there is oil or water on any part, check the front case oil seal, camshaft oil seal and water pump for leaks.

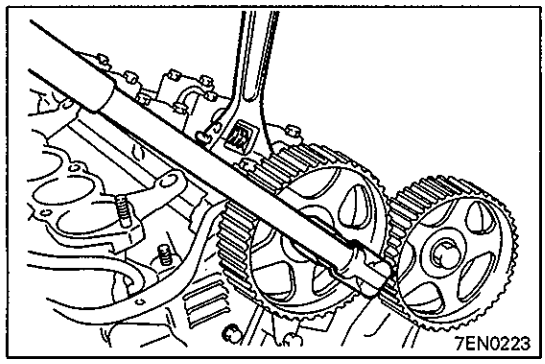

◇C◇ REMOVAL OF CAMSHAFT SPROCKET BOLT

(1) While holding the hexagonal portion of the camshaft with a wrench, remove the camshaft sprocket bolt.

Caution
- **Using a holding tool on the camshaft sprocket could damage the sprocket teeth.**

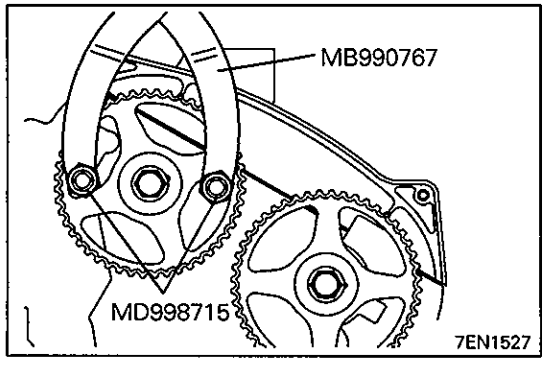

◇D◇ REMOVAL OF CAMSHAFT POSITION SENSOR SENSING CYLINDER

(1) With the camshaft sprocket locked in position using the special tool, remove the camshaft position sensor sensing cylinder.

© Mitsubishi Motors Corporation Mar. 2000

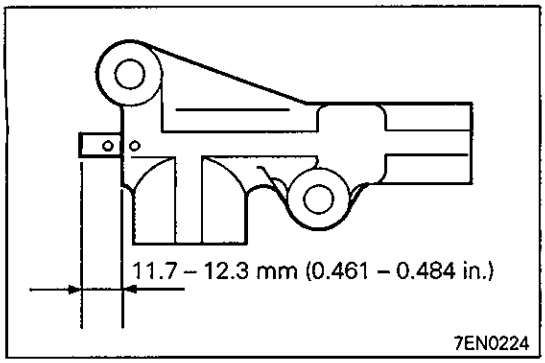

INSPECTION

TIMING BELT

Refer to "INSPECTION" on page 11A-5-6.

AUTO-TENSIONER

(1) Check for oil leaks. If oil leaks are evident, replace the auto-tensioner.
(2) Check the rod end for wear or damage and replace the auto-tensioner if necessary.
(3) Measure the rod projection length. If the reading is outside the standard value, replace the auto tensioner.

Standard value:
11.7 – 12.3 mm (0.461 – 0.484 in.)

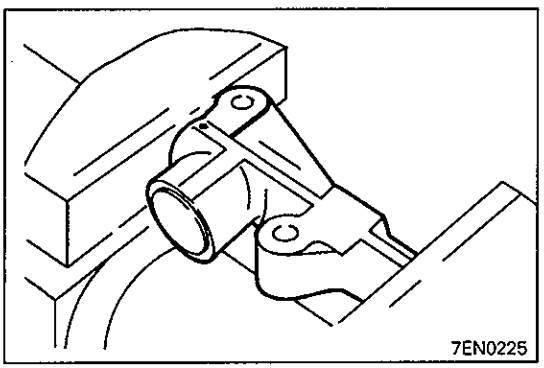

(4) Use a vice to force the auto tensioner rod in. If the rod slides in easily, replace the tensioner. If there is nothing wrong, the rod will offer considerable resistance.

Caution
- **Set the auto tensioner in a vice, while making sure that the auto tensioner is not tilted.**

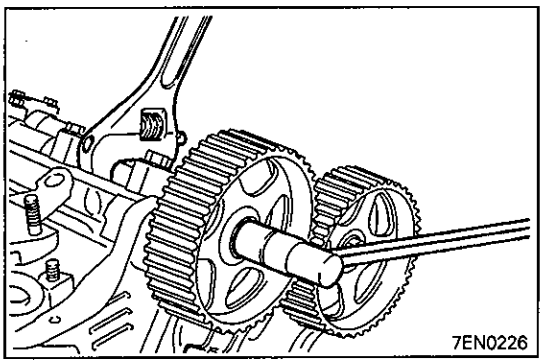

SERVICE POINTS OF INSTALLATION

◗A◖ INSTALLATION OF CAMSHAFT SPROCKET BOLT

(1) While holding the hexagonal portion of the camshaft with a wrench, tighten the bolt to the specified torque.

Caution
- **Using a holding tool on the camshaft sprocket could damage the sprocket teeth.**

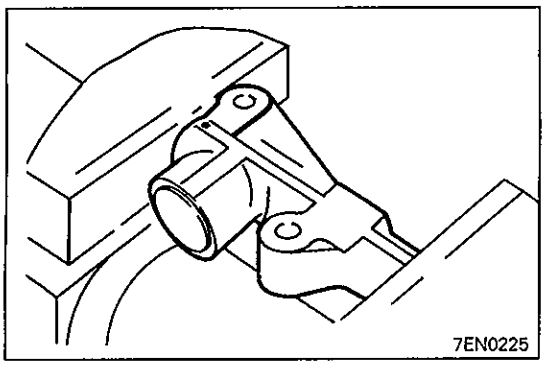

◗B◖ INSTALLATION OF AUTO-TENSIONER

(1) If the auto-tensioner rod is fully extended, set it in the retracted position with the following procedure.
  ① Set the auto tensioner in a vice, while making sure it is not tilted.

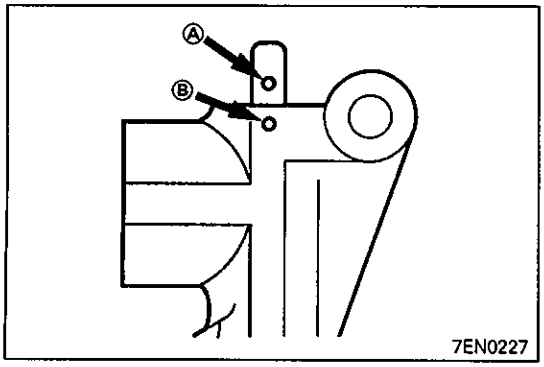

② Slowly close the vice to force the rod in until the set hole (A) of the rod is lined up with the set hole (B) of the cylinder.
③ Insert a metal wire [1.4 mm (0.055 in.) in diameter] into the set holes.
④ Remove the auto tensioner from the vice.

(2) On engines with turbocharger, apply sealant to the threads of the auto tensioner mounting bolt.

Specified sealant: 3M ATD Part No.8660 or equivalent.

(3) Install the auto tensioner on the cylinder block through the oil pump case.

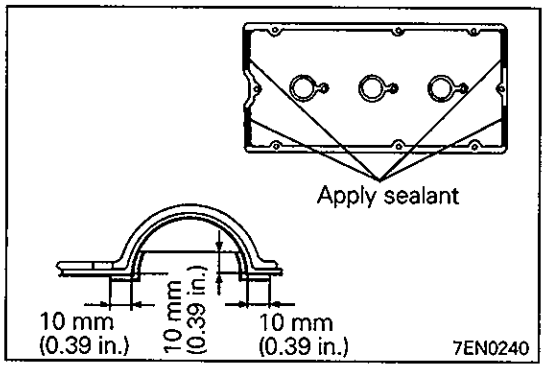

◆C◆ INSTALLATION OF ROCKER COVER

(1) Apply a sealant to the areas shown in the illustration.

Specified sealant: 3M ATD Part No.8660 or equivalent

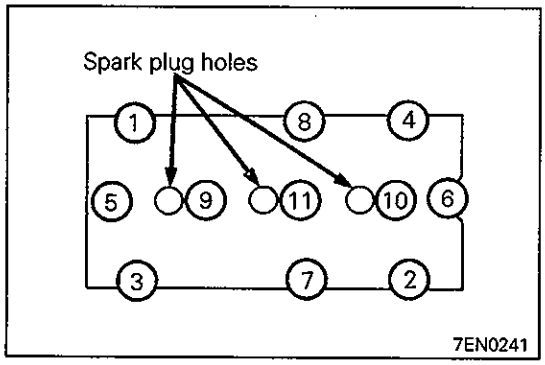

(2) Tighten the rocker cover bolts in the sequence shown in the illustration.

NOTE
The right and left bank bolts are painted in different colors for identification.
Right bank bolts ..... Black
Left bank bolts ..... Green

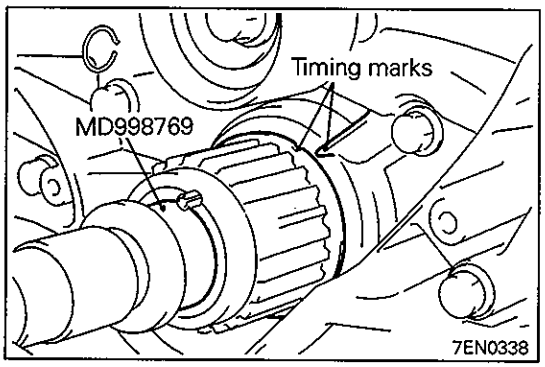

◆D◆ INSTALLATION OF TIMING BELT

(1) Using a special tool, line up the crankshaft sprocket timing marks, and then rotate the sprocket one tooth counter-clockwise.

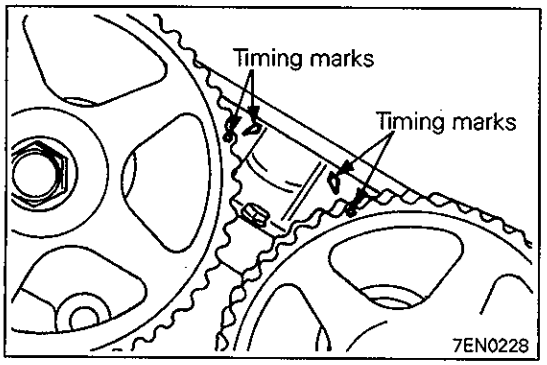

(2) Line up the timing marks of the camshaft sprockets for even-numbered cylinders on the rear (or left) bank.

© Mitsubishi Motors Corporation Mar. 2000

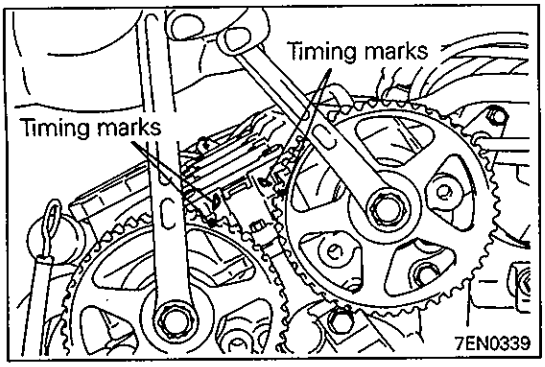

(3) Using two wrenches, line up the timing marks of the camshaft sprockets for odd-numbered cylinders on the front (or right) bank.

Caution

- **Since valve spring force can turn the camshaft sprocket, be careful not to catch your finger.**
- **If either camshaft sprocket is rotated one complete turn clockwise or counterclockwise after lining up the timing marks of the other camshaft sprocket, the intake and exhaust valves might interfere. Consequently, if a camshaft sprocket was turned too far in lining up the timing marks, be sure to rotate it back from that position to line up again the timing marks.**

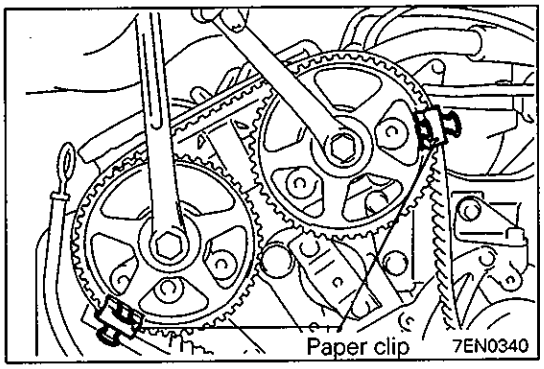

(4) Install the timing belt on the exhaust side camshaft sprocket for odd-numbered cylinders (on front or right bank) and hold it with a paper clip at the position shown in the illustration.
(5) Install the timing belt on the intake side camshaft sprocket and hold it with a paper clip at the positions shown in the illustration.

Caution

- **Since the camshaft sprocket turns easily, avoid excessive pulling on the timing belt.**

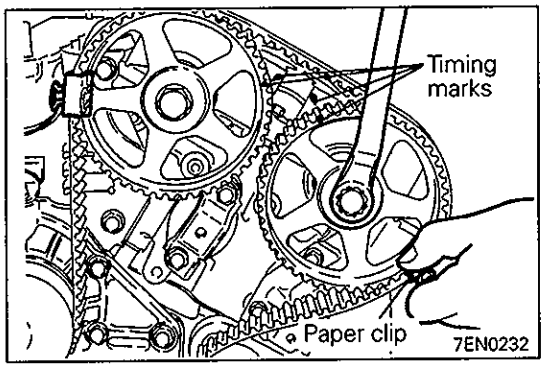

(6) Check that the timing marks of the camshaft sprockets for even-numbered cylinders (on rear or left bank) are in alignment. Then install the timing belt on these sprockets and hold it with a paper clip at the positions shown in the illustration.
(7) Install the timing belt on the idler pulley.
(8) Install the timing belt on the crankshaft sprocket.
(9) Install the timing belt on the tensioner pulley.

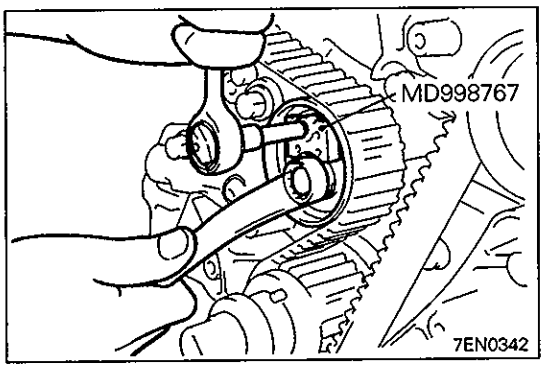

(10) While lightly pressing the tensioner pulley against the timing belt with the special tool, tighten the locking bolt temporarily.
(11) Remove the four paper clips.

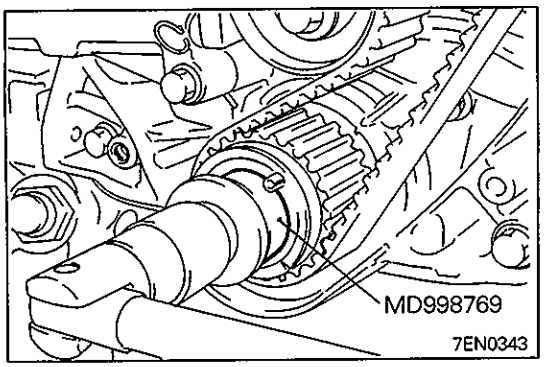

(12) Using a special tool, turn the crankshaft a quarter of a turn counterclockwise. Then rotate it clockwise to line up the timing marks and check that all the timing marks are in alignment.

© Mitsubishi Motors Corporation Mar. 2000

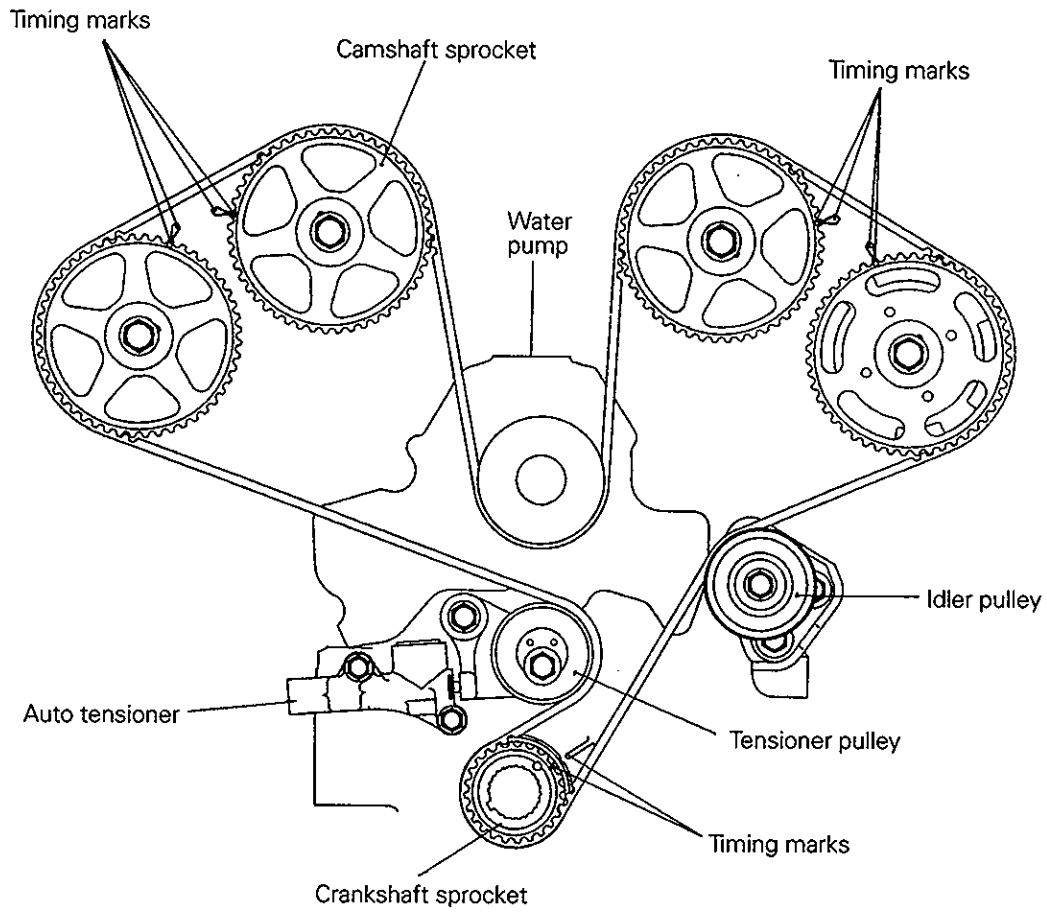

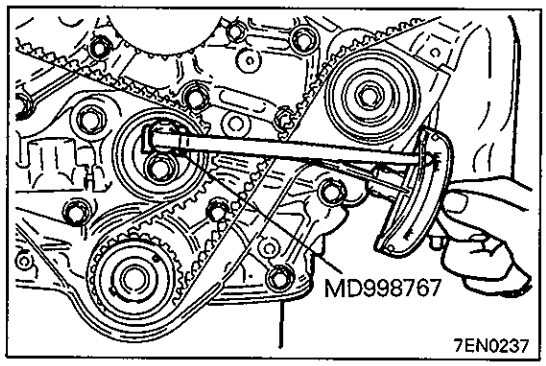

(13) Loosen the center bolt of the auto-tensioner pulley, and install a special tool and torque wrench on the pulley. While holding the pulley with approximately 9.8 Nm {1.0 kgfm, 7 ft.lbs.} (6G72·6G73) or 9.4 Nm {0.96 kgfm, 7 ft.lbs.} (6G74) torque to prevent it from turning, tighten the center bolt to the specified torque.

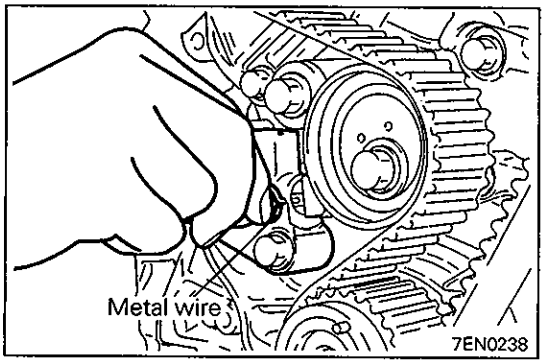

(14) Turn the crankshaft two turns clockwise, and leave it alone for about five minutes. Then move in and out the auto-tensioner setting metal wire to check that the wire moves smoothly.

NOTE
If the metal wire does not move smoothly, repeat step (12) until it does move smoothly.

(15) Remove the auto tensioner setting metal wire.

© Mitsubishi Motors Corporation Mar. 2000

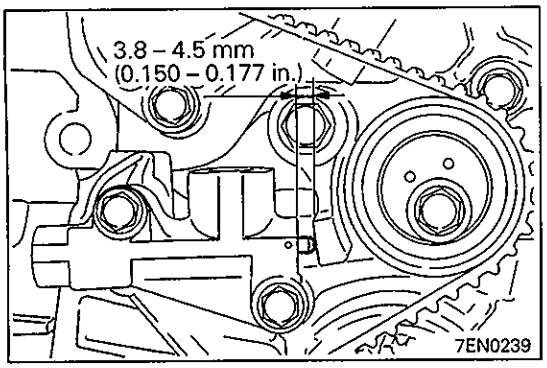

(16) Check that the spacing between the tensioner arm and auto tensioner is within the standard limit.

Standard value: 3.8 – 4.5 mm (0.150 – 0.177 in.)

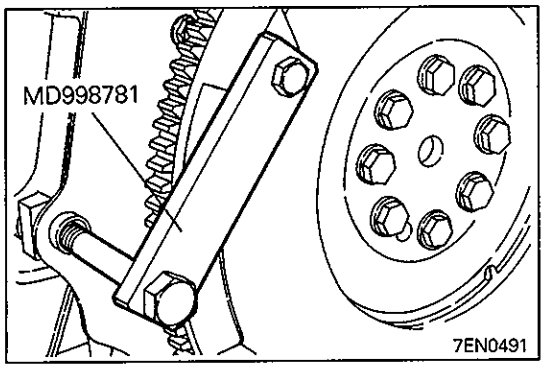

◆E◆ INSTALLATION OF CRANKSHAFT PULLEY BOLT

(1) Using the special tool, hold the drive plate or flywheel.
(2) Install the crankshaft bolt.

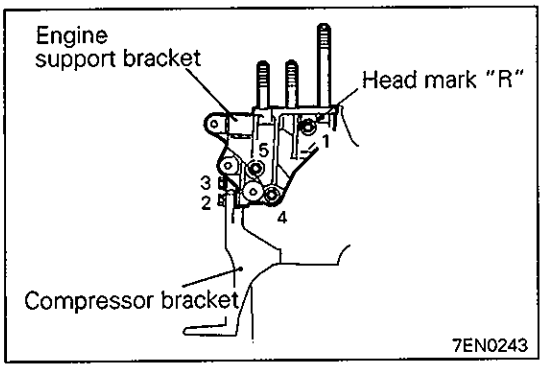

◆F◆ INSTALLATION OF ENGINE SUPPORT BRACKET

(1) Tighten the engine support bracket bolts in the order shown in the illustration.

NOTE
The bolt used at the location shown in the illustration is a reamer bolt (head mark "R").

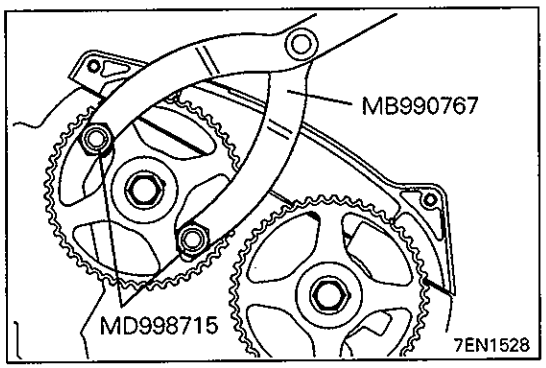

◆G◆ INSTALLATION OF CAMSHAFT POSITION SENSOR SENSING CYLINDER

(1) With the camshaft sprocket locked in position using the special tool, install the camshaft position sensor sensing cylinder.

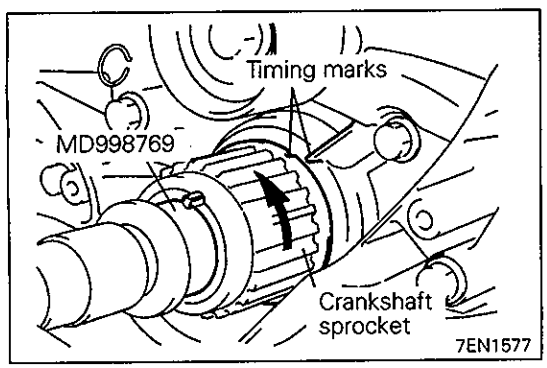

◆H◆ INSTALLATION OF TIMING BELT

(1) Turn the crankshaft sprocket so that its timing mark is off three teeth to slightly lower the piston in No. 1 cylinder from its TDC on the compression stroke.

Caution

- **There can be an interference between the valve and piston when the camshaft sprocket is turned with the piston in No. 1 cylinder at its TDC on the compression stroke.**

© Mitsubishi Motors Corporation Mar. 2000

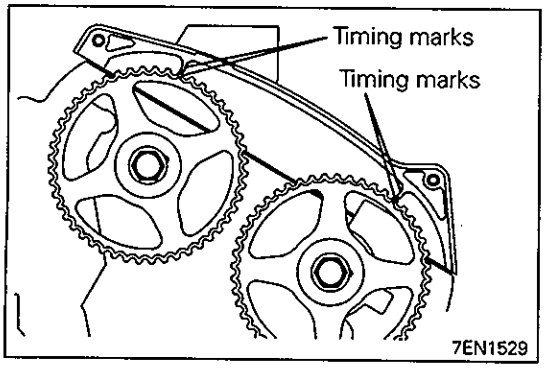

(2) Align the timing mark of the camshaft sprocket on the left bank side.

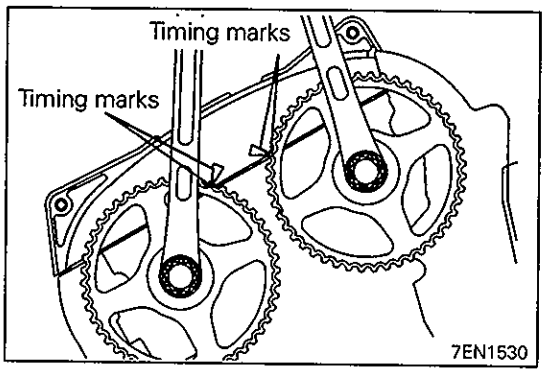

(3) Align the timing marks of the camshaft sprockets on the right bank side. When the special tool is removed, the sprocket turns by itself, letting the timing mark to deviate. Make necessary corrections, therefore, in step (5) to align the timing mark before installing the belt.

Caution

- **The camshaft sprockets on the right bank side are easy to turn because of the spring tension involved. Be careful not to allow your finger to be pinched in the mechanism.**
- **Do not attempt to turn one of the sprockets on the right side one turn with the timing mark of another one aligned. It may cause the intake and exhaust valves to interfere with each other.**

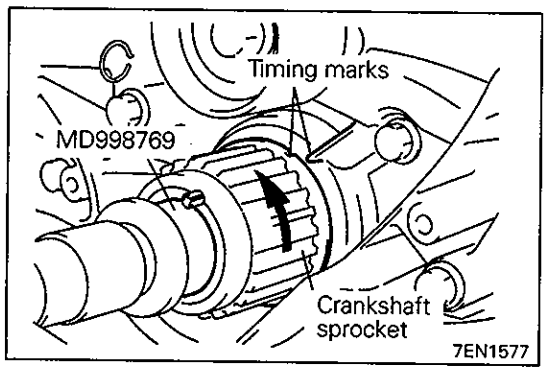

(4) Align the timing mark of the crankshaft sprocket. Then, turn the crankshaft sprocket one tooth counterclockwise.

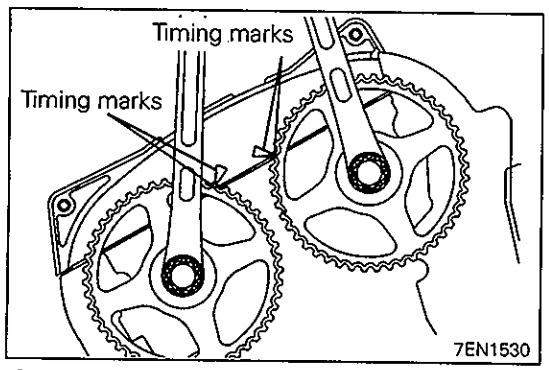

(5) Align the timing marks of the camshaft sprockets on the right bank side and lock them in position with box wrenches.

© Mitsubishi Motors Corporation Mar. 2000

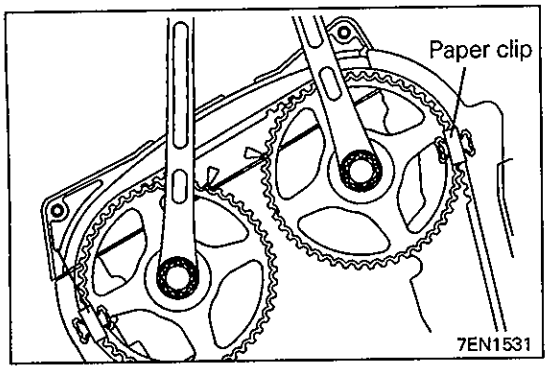

(6) Make sure that the timing mark of the exhaust camshaft sprocket on the right bank side is in alignment. Then install the timing belt over the sprocket and secure it with a paper clip.

Caution

- **If the old timing belt is to be reused, install it so that the arrow marked during removal procedures points in the turning direction.**

(7) Check that the timing mark is aligned on the intake camshaft sprocket. Then install the timing belt and secure it with a paper clip.

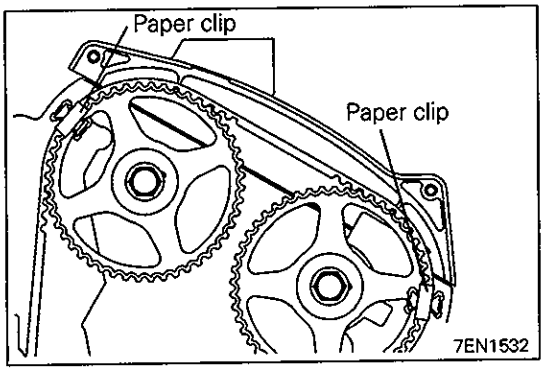

(8) Place the timing belt around the water pump pulley.
(9) Check that the timing marks of the camshaft sprockets on the left bank side are in alignment. Then install the timing belt over the sprockets and secure it with paper clips.
(10) Place the timing belt around the idler pulley.
(11) Place the timing belt around the crankshaft sprocket.
(12) Place the timing belt around the tensioner pulley.

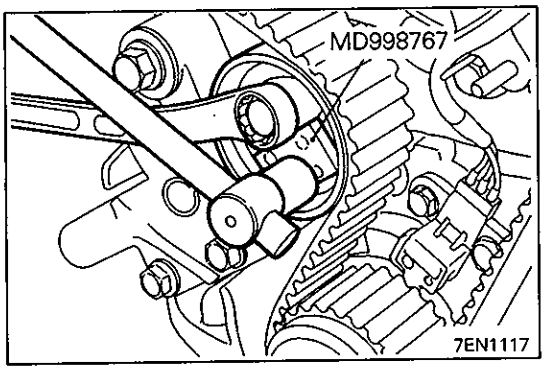

(13) Make sure that the tensioner pulley is positioned so that its pinhole is on the upper side. Then, lightly press the tensioner pulley against the timing belt and temporarily tighten the fixing bolt.
(14) Remove all four paper clips.
(15) Turn the crankshaft one tooth clockwise.
(16) Check that the timing mark of each sprocket is properly aligned.

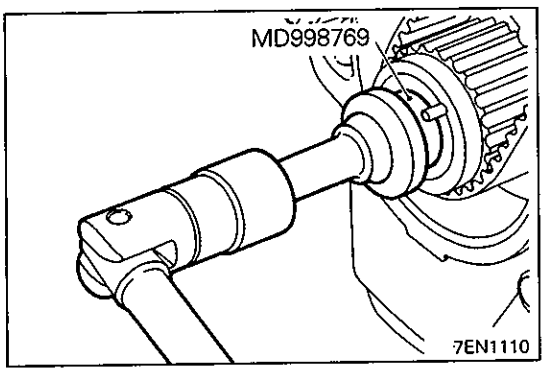

(17) Turn the crankshaft 1/4 turns counterclockwise. Then, turn it clockwise and check that the timing marks are properly aligned.

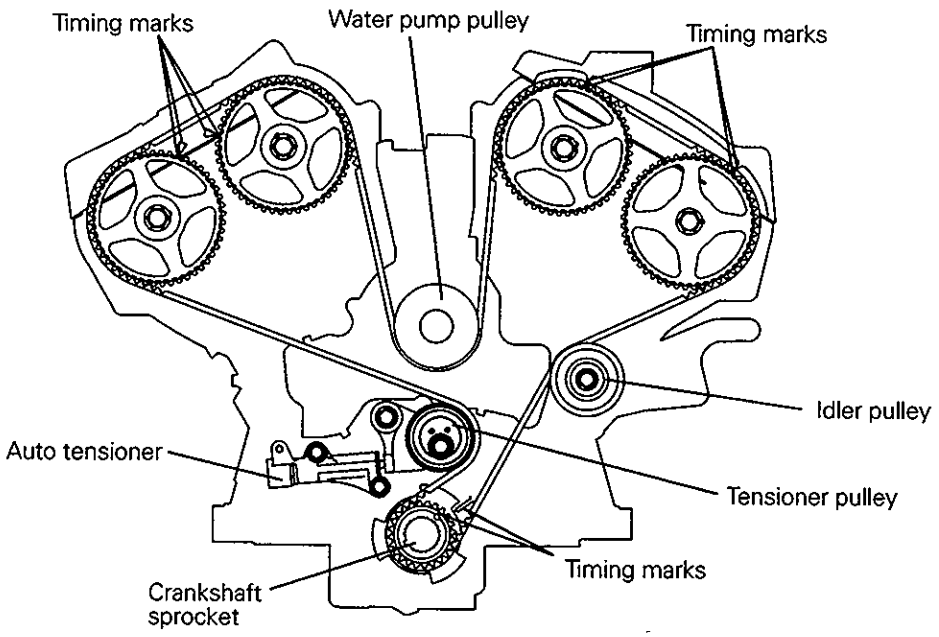

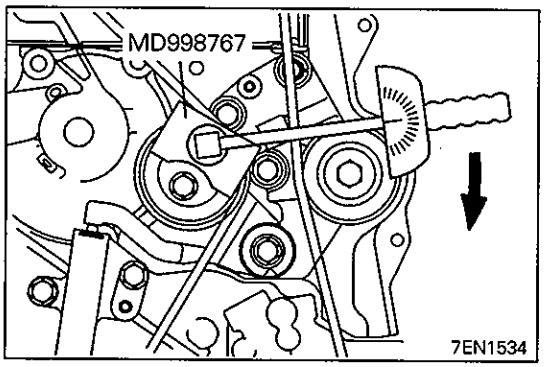

(18) Loosen the center bolt of the tensioner pulley and install the special tool and torque wrench. Apply a torque of 4.4 Nm {0.45 kgfm, 3.25 ft.lbs.} to prevent the tensioner pulley from turning together, tighten the center bolt to the specified torque.

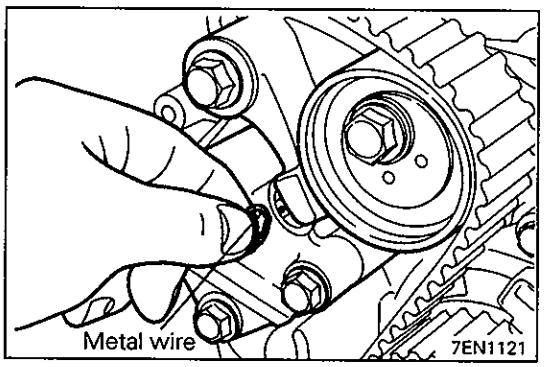

(19) Turn the crankshaft two complete turns clockwise and leave it to stand for about 5 minutes.

(20) Check to see if the metal wire, which has been inserted during installation procedures, can be removed easily from the auto-tensioner.
If it can be removed with a light force, it indicates that the belt tension is appropriate. Now, remove the metal wire. Another indication of an adequate belt tension is that the protrusion of the rod of the auto-tensioner falls within the standard value range.

Standard value: 4.8 – 5.5 mm (0.139 – 0.217 in.)

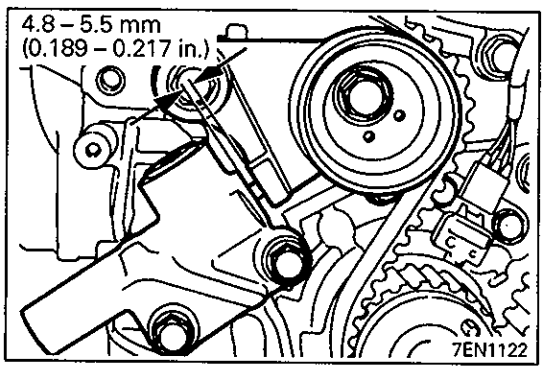

(21) If the metal wire cannot be pulled out easily, repeat steps (18) and (19) until an adequate tension is obtained.

© Mitsubishi Motors Corporation Mar. 2000

NOTES

6a. INTAKE MANIFOLD

REMOVAL AND INSTALLATION

(Four-camshaft engine for rear wheel drive vehicle)

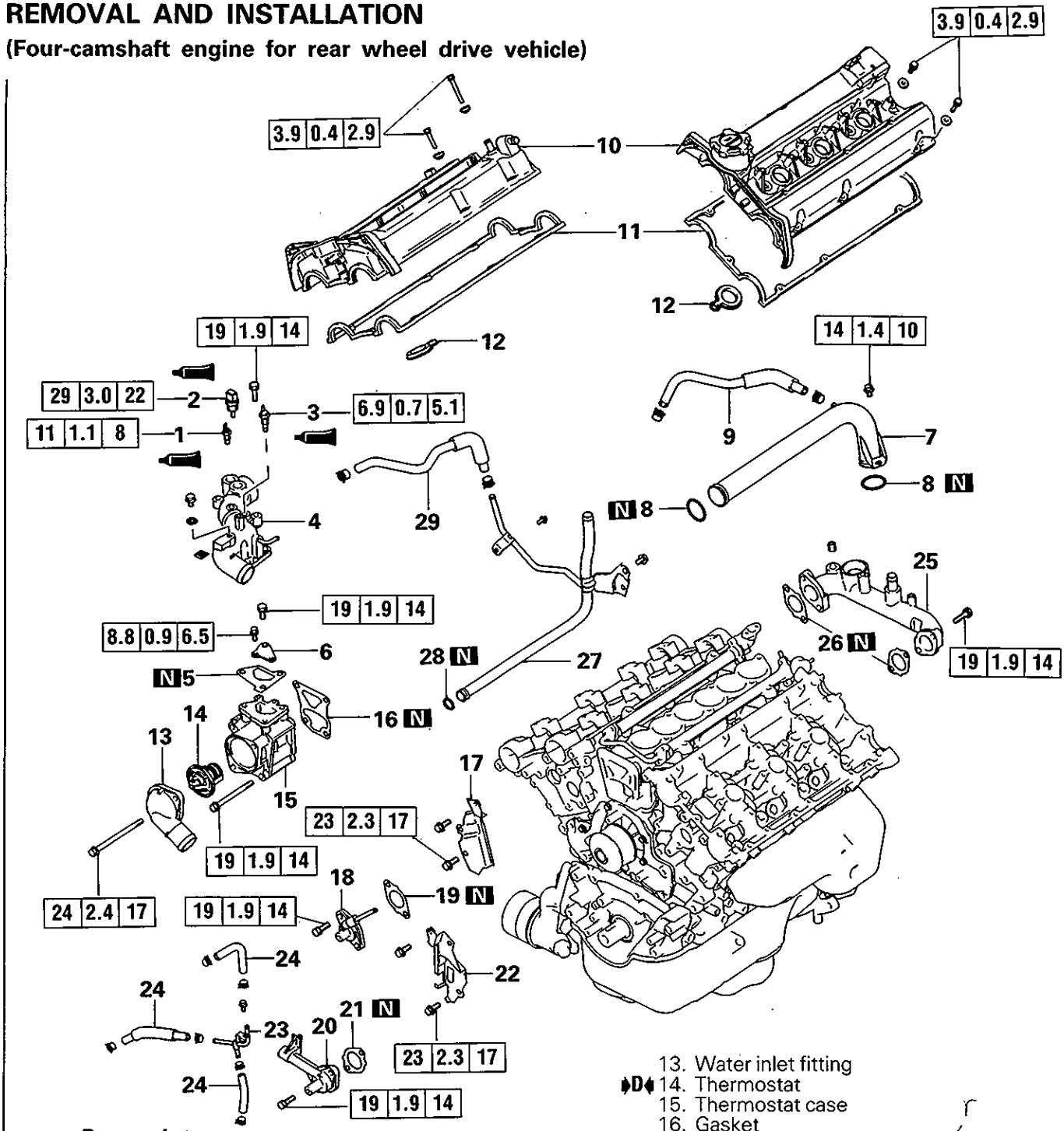

Removal steps

- ◆I◆ 1. Engine coolant temperature gauge unit
- ◆H◆ 2. Engine coolant temperature sensor
- ◆G◆ 3. Thermo switch
- 4. Water outlet fitting
- 5. Gasket
- 6. Thermostat case bracket
- ◆C◆ 7. Water outlet pipe
- ◆C◆ 8. O-ring
- 9. Auto tensioner
- ◆F◆ 10. Rocker cover
- 11. Rocker cover gasket, A
- 12. Rocker cover gasket, B
- 13. Water inlet fitting
- ◆D◆ 14. Thermostat
- 15. Thermostat case
- 16. Gasket
- 17. Timing belt rear center cover, right
- 18. Fitting, right
- 19. Gasket
- 20. Fitting, left
- 21. Gasket
- 22. Timing belt rear center cover, left
- 23. Fitting
- 24. Water hose
- 25. Water passage
- 26. Gasket
- ◆C◆ 27. Water pipe
- ◆C◆ 28. O-ring
- 29. Water hose

7EN0663

© Mitsubishi Motors Corporation Aug. 1994

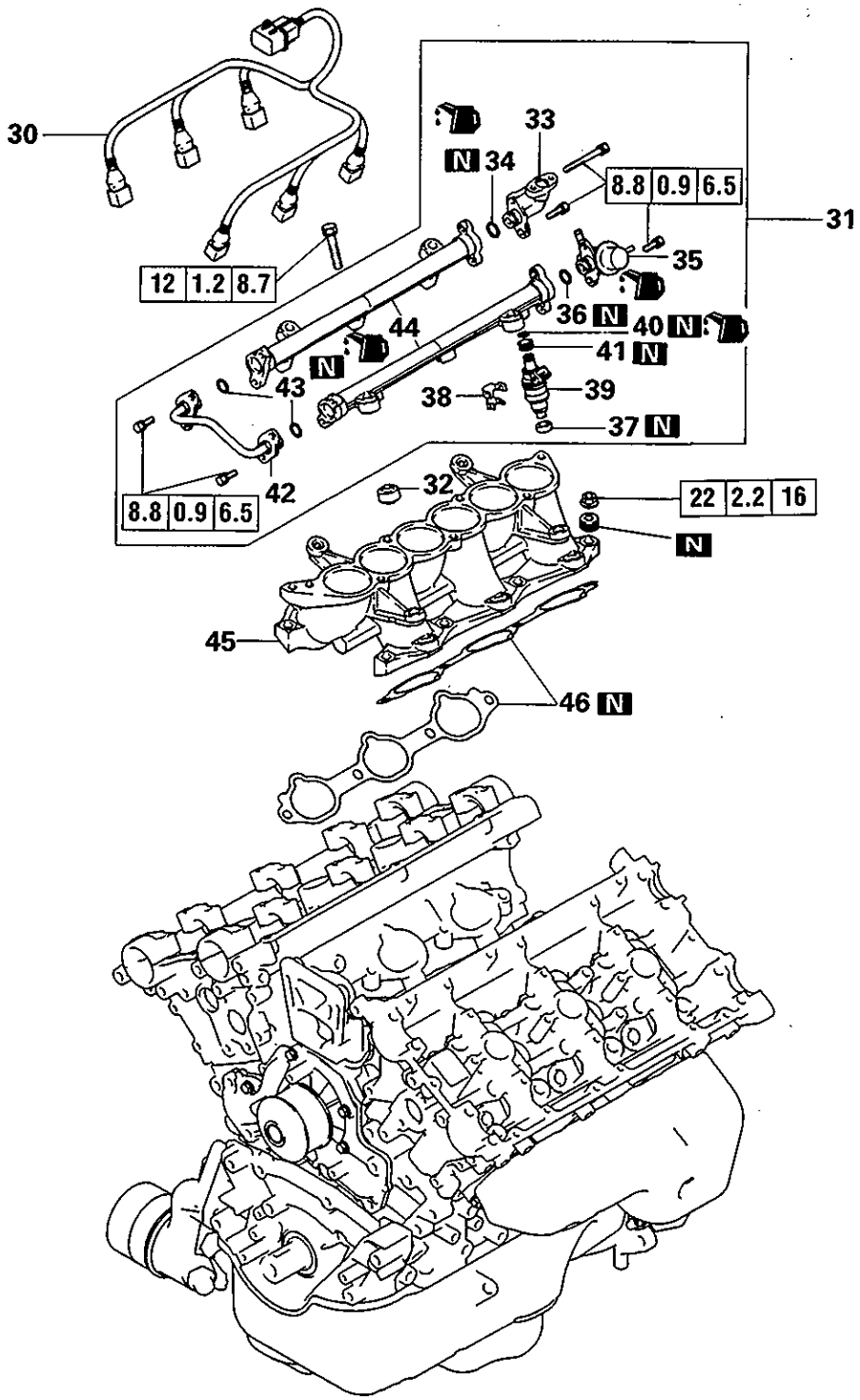

Removal steps

30. Injector harness
31. Injector and delivery pipe
32. Insulator
◆B◆ 33. Fuel inlet fitting
34. O-ring
◆B◆ 35. Fuel pressure regulator
36. O-ring
37. Insulator
38. Injector clip
39. Injector
40. O-ring
41. Grommet
42. Fuel pipe
43. O-ring
44. Delivery pipe
◆A◆ 45. Intake manifold
46. Intake manifold gasket

7EN0664

© Mitsubishi Motors Corporation Aug. 1994

REMOVAL AND INSTALLATION

(Two-camshaft 24-valve engine except for 2001 model PAJERO)

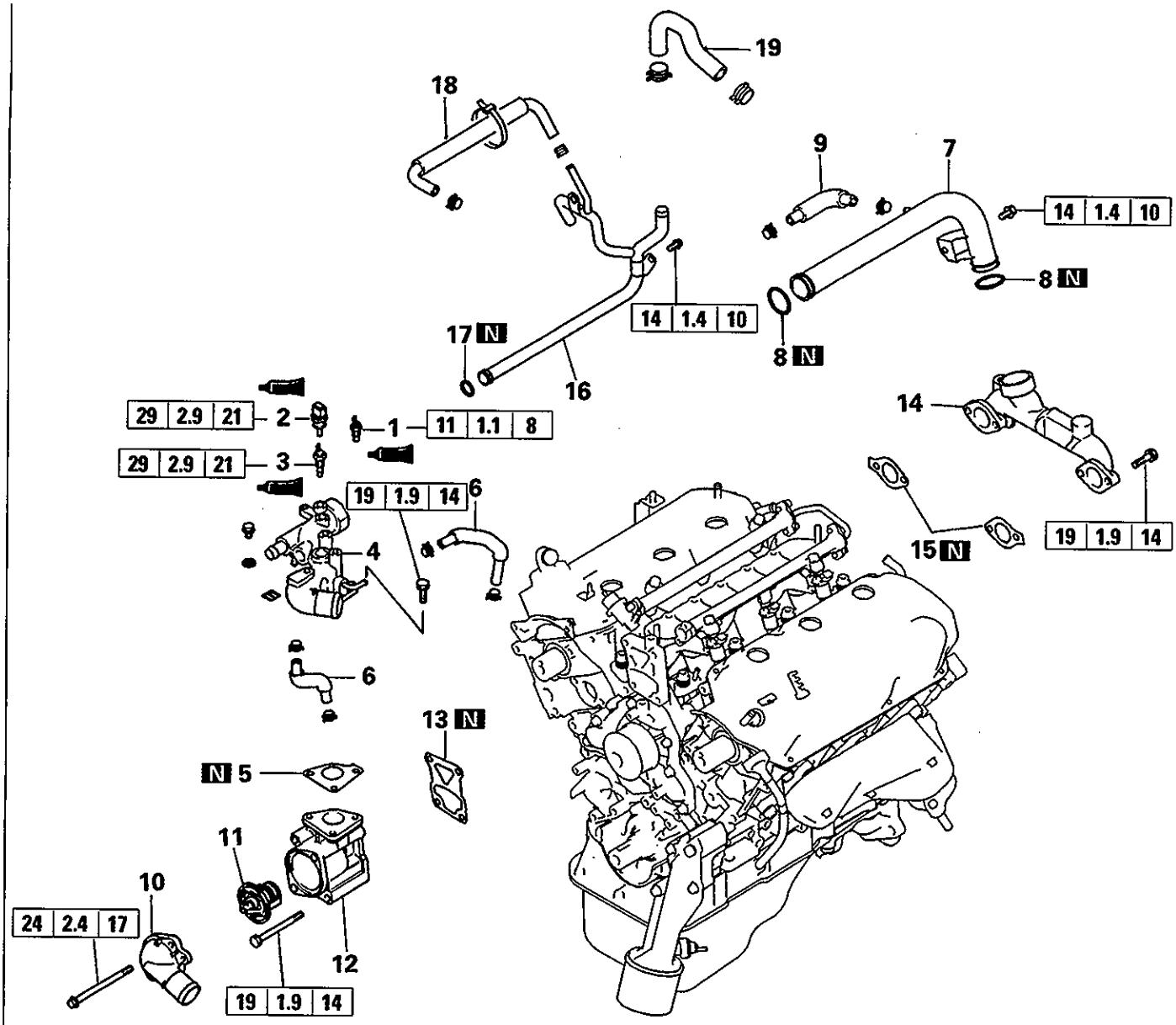

Removal steps

- ◆I◆ 1. Engine coolant temperature gauge unit
- ◆H◆ 2. Engine coolant temperature sensor
- ◆G◆ 3. Thermo switch – Up to 1999 models PAJERO SPORT for Europe and CHALLENGER for General Export with automatic transmission, up to 2000 models CHALLENGER and L200 for Australia with automatic transmission
- 4. Water outlet fitting
- 5. Water outlet fitting gasket
- 6. Water hose
- ◆C◆ 7. Water outlet pipe
- ◆C◆ 8. O-ring
- 9. Water hose
- 10. Water inlet fitting
- ◆E◆ 11. Thermostat
- 12. Thermostat case
- 13. Gasket
- 14. Water passage
- 15. Gasket
- ◆C◆ 16. Water pipe
- ◆C◆ 17. O-ring
- 18. Water hose
- 19. Water hose – L400 and Pajero

7EN0751

© Mitsubishi Motors Corporation Mar. 2000

(2001 model PAJERO)

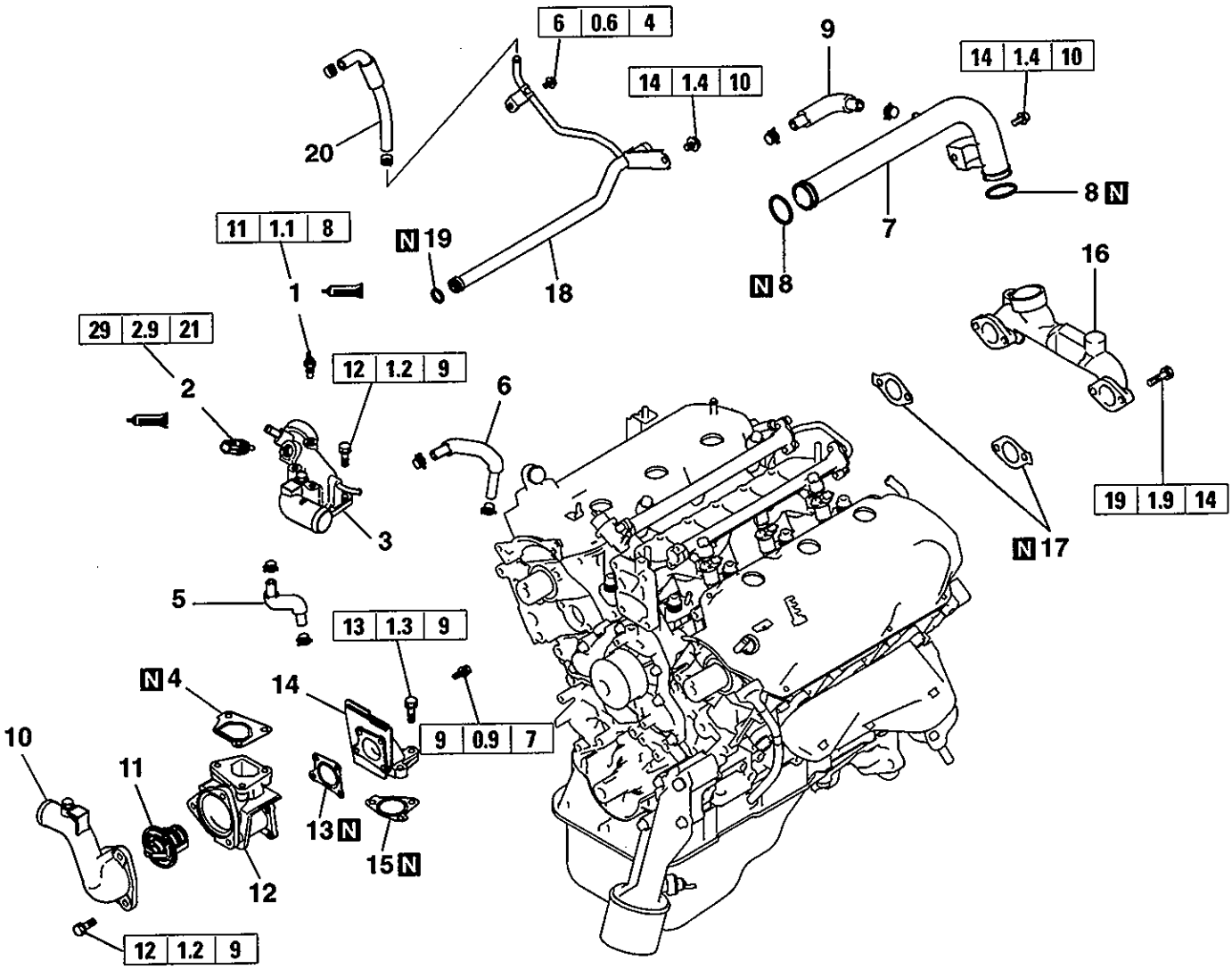

Removal steps

- ◆I◆ 1. Engine coolant temperature gauge unit
- ◆H◆ 2. Engine coolant temperature sensor
- 3. Water outlet fitting
- 4. Gasket
- 5. Water hose
- 6. Water hose
- ◆C◆ 7. Water outlet pipe
- ◆C◆ 8. O-ring
- 9. Water hose
- 10. Water inlet fitting
- ◆E◆ 11. Thermostat
- 12. Thermostat case
- 13. Gasket
- 14. Water pump fitting
- 15. Gasket
- 16. Water passage
- 17. Gasket
- ◆C◆ 18. Water pipe
- ◆C◆ 19. O-ring
- 20. Water hose

7EN1575

© Mitsubishi Motors Corporation Mar. 2000

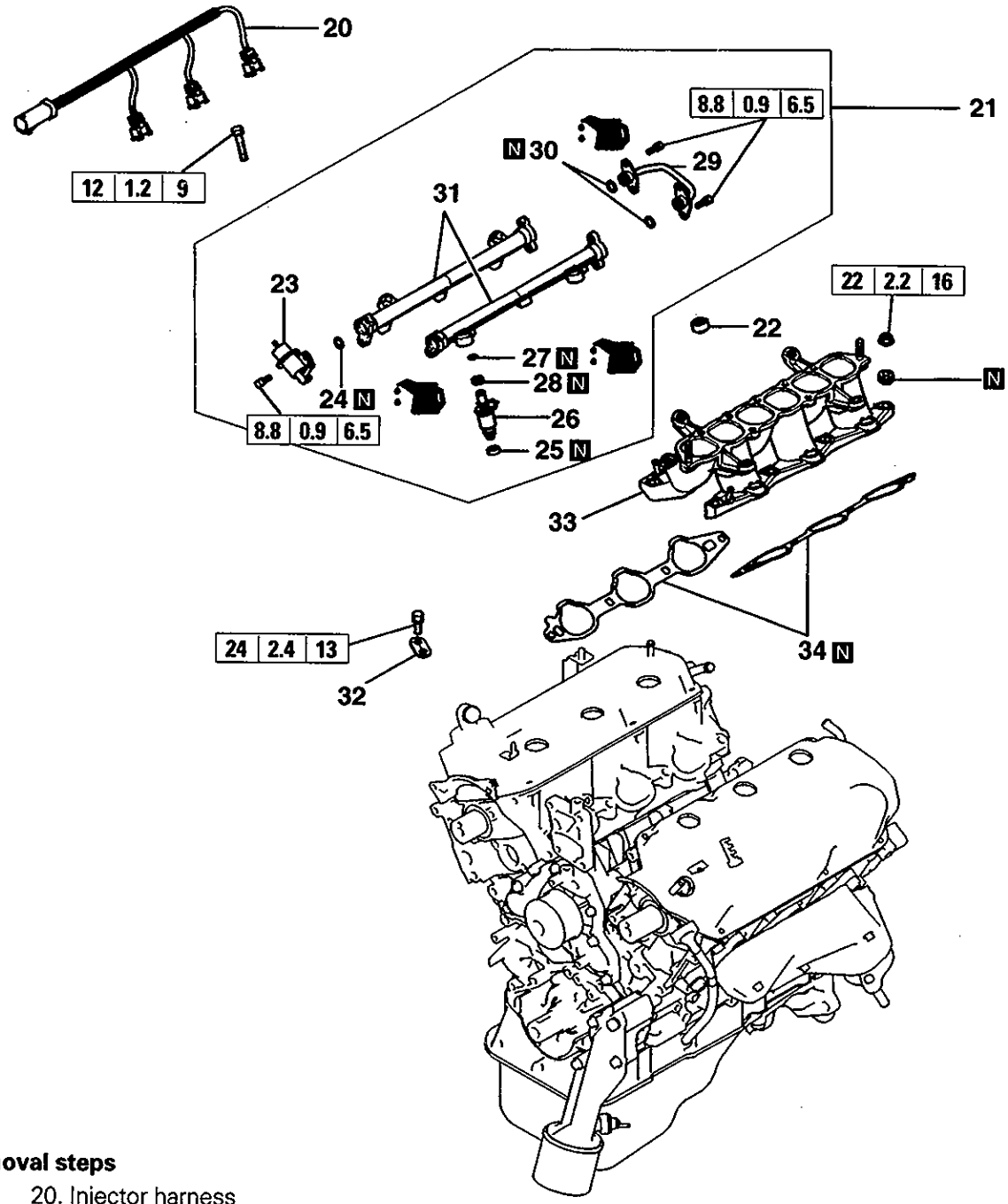

Removal steps

20. Injector harness
21. Injector and delivery pipe
22. Insulator
◆B◆23. Fuel pressure regulator
24. O-ring
25. Insulator
26. Injector
27. O-ring
28. Grommet
29. Fuel pipe
30. O-ring
31. Delivery pipe
32. Bracket
◆A◆33. Intake manifold
34. Intake manifold gasket

7EN1372

© Mitsubishi Motors Corporation Mar. 2000

Added

Intentionally blank

◆A◆ INSTALLATION OF INTAKE MANIFOLD

(1) Refer to "INSTALLATION OF INTAKE MANIFOLD" on page 11A-4-5.

◆B◆ INSTALLATION OF FUEL PRESSURE REGULATOR AND FUEL INLET FITTING

(1) Before installing the pressure regulator, the O-ring must be lubricated with a drop of new engine oil for easy installation.

Caution

- **Use care not to let the engine oil enter the delivery pipe.**

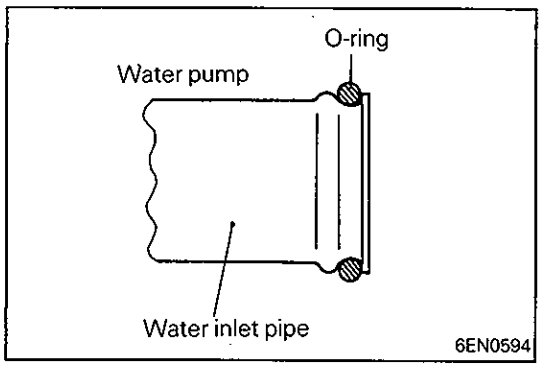

◆C◆ INSTALLATION OF O-RING / WATER PIPE

(1) Wet the O-ring (with water) to facilitate assembly.

Caution

- **Keep the O-ring free of oil or grease.**

◆D◆ INSTALLATION OF THERMOSTAT

(1) Refer to "INSTALLATION OF THERMOSTAT" on page 11A-4-4.

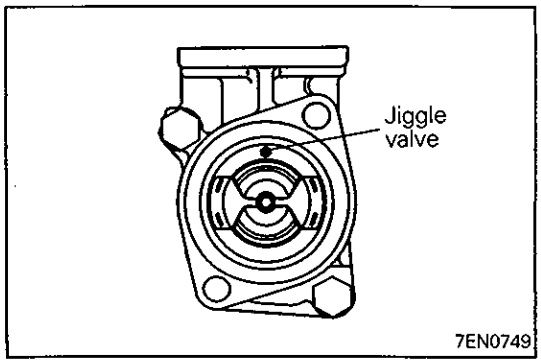

◆E◆ INSTALLATION OF THERMOSTAT

(1) Install the thermostat in the thermostat case with its jiggle valve located at the top position.

© Mitsubishi Motors Corporation Aug. 1994

◆F◆ INSTALLATION OF ROCKER COVER

(1) Refer to "INSTALLATION OF ROCKER COVER" on page 11A-6-5.

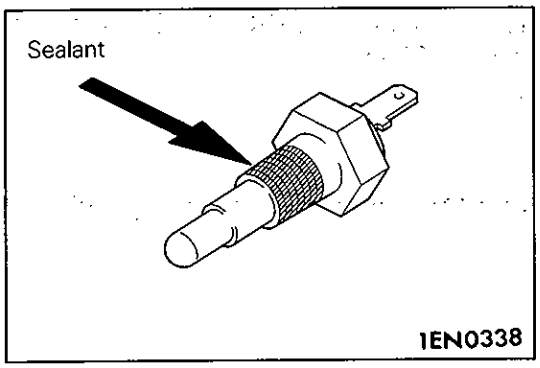

◆G◆ APPLICATION OF SEALANT TO THERMO SWITCH

Specified sealant:
3M Nut Locking Part No. 4171 or equivalent

◆H◆ APPLICATION OF SEALANT TO ENGINE COOLANT TEMPERATURE SENSOR

(1) Refer to "APPLICATION OF SEALANT TO ENGINE COOLANT TEMPERATURE SENSOR" on page 11A-4-4.

◆I◆ APPLICATION OF SEALANT TO ENGINE COOLANT GAUGE UNIT

(1) Refer to "APPLICATION OF SEALANT TO ENGINE COOLANT GAUGE UNIT" on page 11A-4-5.

© Mitsubishi Motors Corporation Aug. 1994

6b.WATER HOSE, WATER PIPE (GDI)

REMOVAL AND INSTALLATION

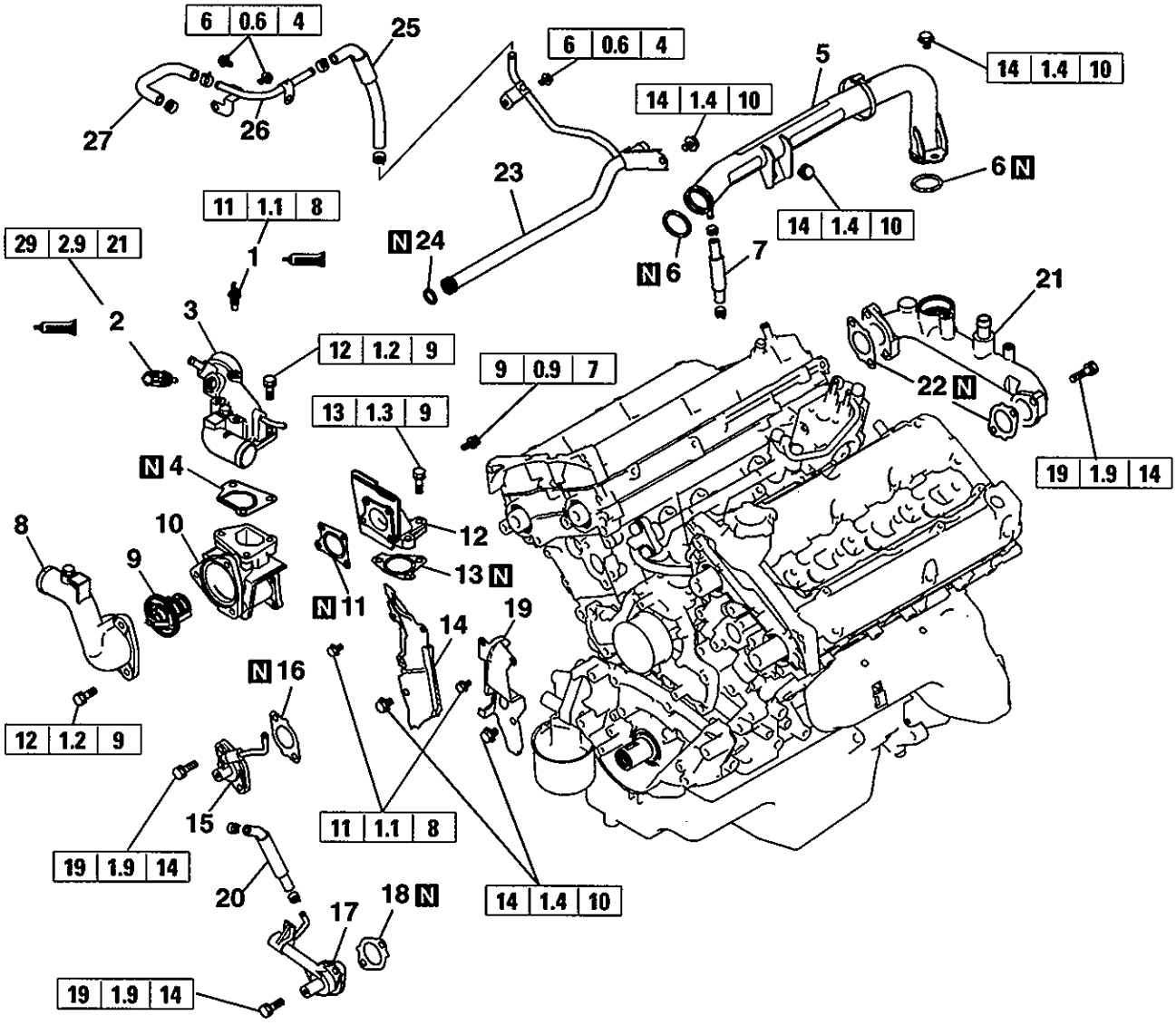

Removal steps

- ◆E◆ 1. Engine coolant temperature gauge unit
- ◆D◆ 2. Engine coolant temperature sensor
- 3. Water outlet fitting
- 4. Gasket
- ◆C◆ 5. Water outlet pipe
- ◆C◆ 6. O-ring
- 7. Water hose
- 8. Water inlet fitting
- ◆B◆ 9. Thermostat
- 10. Thermostat case
- 11. Gasket
- 12. Water pump fitting
- 13. Gasket
- 14. Timing belt rear center cover, right
- 15. Fitting, right
- 16. Gasket
- 17. Fitting, left
- 18. Gasket
- 19. Timing belt rear center cover, left
- 20. Water hose
- 21. Water passage
- 22. Gasket
- ◆A◆23. Water pipe
- ◆A◆24. O-ring
- 25. Water hose
- 26. Water pipe assembly B
- 27. Water hose

7EN1519

© Mitsubishi Motors Corporation Mar. 2000

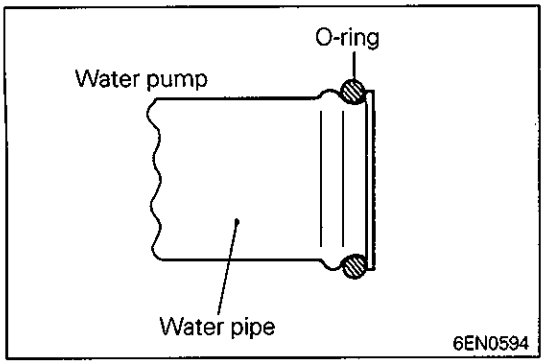

SERVICE POINTS OF INSTALLATION

◗A◖ INSTALLATION OF O-RING / WATER PIPE

(1) Fit a new O-ring in the groove at the front end of the water pipe.
(2) Coat the O-ring with water or soapsuds.

Caution
- **Never apply engine oil or any other grease to the O-ring.**

(3) Insert the front end of the water pipe in the water pump.

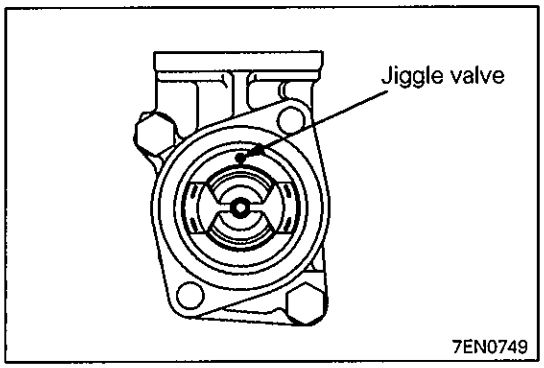

◗B◖ INSTALLATION OF THERMOSTAT

(1) Install the thermostat so that the jiggle valve is on the top end.

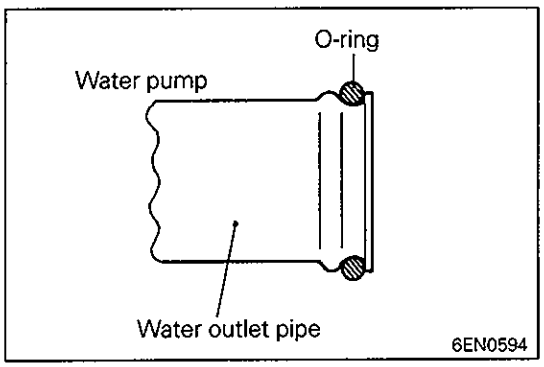

◗C◖ INSTALLATION OF O-RING / WATER OUTLET PIPE

(1) Fit new O-rings in the grooves at the front and rear ends of the water pipe.
(2) Coat the O-rings with water or soapsuds.

Caution
- **Never apply engine oil or any other grease to the O-rings.**

(3) Insert the front end of the pipe into the water outlet pipe and rear end into the water passage.

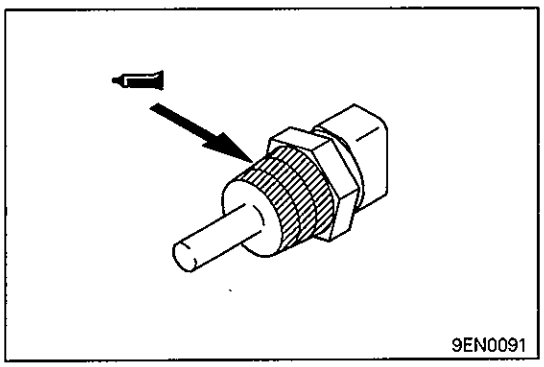

◗D◖ INSTALLATION OF ENGINE COOLANT TEMPERATURE SENSOR

(1) Apply sealant to threads.

Specified sealant:
3M Nut Locking Part No. 4171 or equivalent

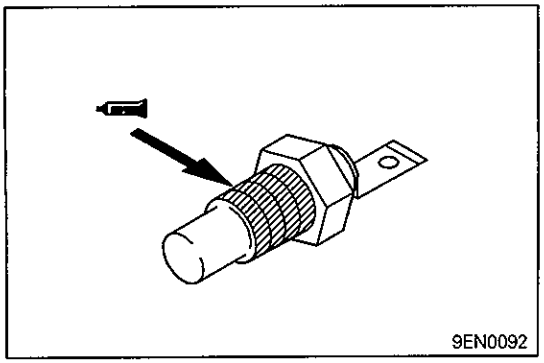

◗E◖ INSTALLATION OF ENGINE COOLANT TEMPERATURE GAUGE UNIT

(1) If the part is to be reused, apply sealant to threads.

Specified sealant:
3M Nut Locking Part No. 4171 or equivalent

© Mitsubishi Motors Corporation Mar. 2000

6c. FUEL SYSTEM (GDI)

REMOVAL AND INSTALLATION

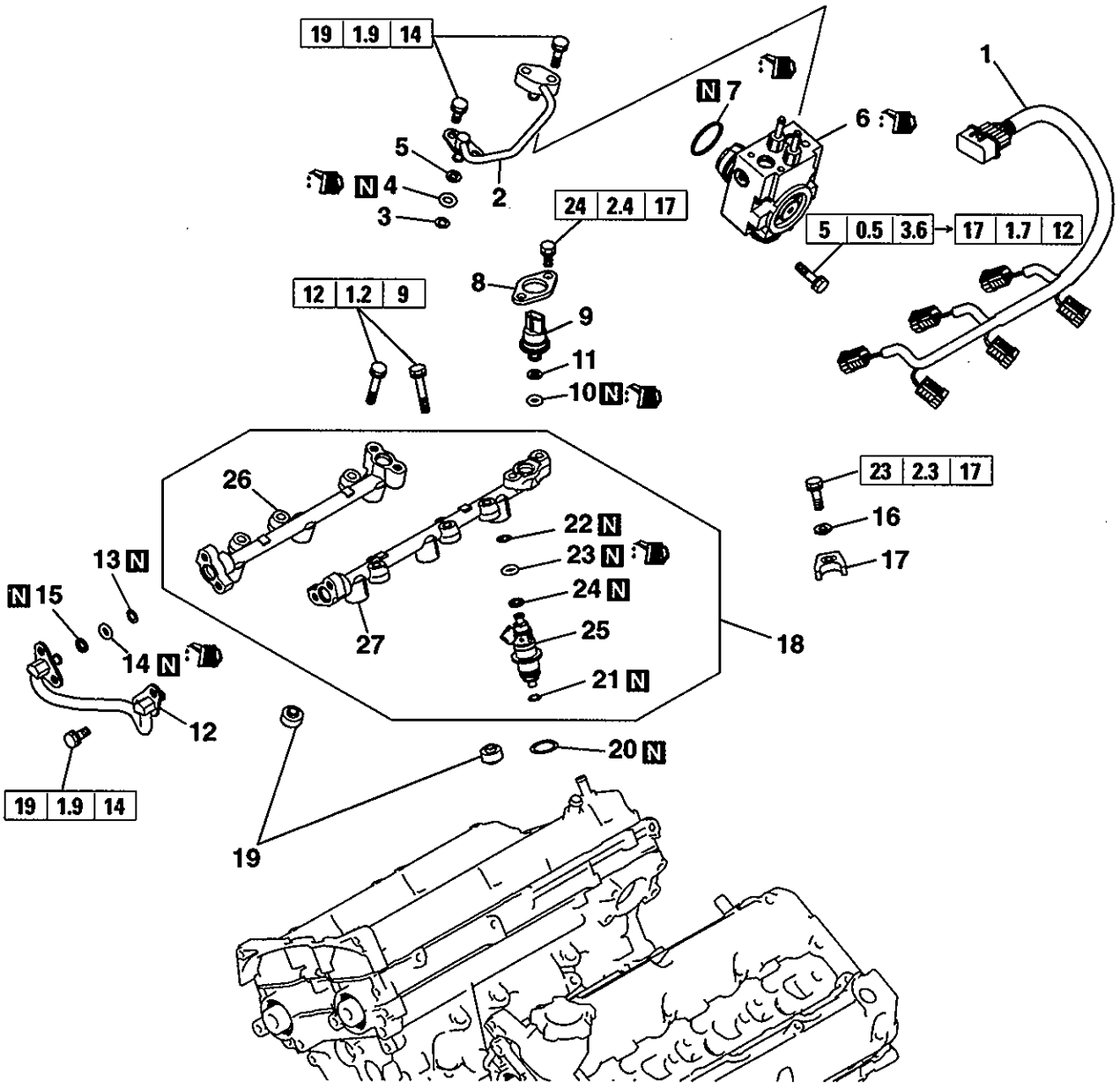

Removal steps

1. Injector harness
F 2. Fuel feed pipe
F 3. Backup ring
F 4. O-ring
F 5. Backup ring
F 6. Fuel pump
7. O-ring
8. Flange
E 9. Fuel pressure sensor
E 10. O-ring
E 11. Backup ring
D 12. Fuel center pipe
D 13. Backup ring
D 14. O-ring
D 15. Backup ring
16. Washer
17. Injector holder
C 18. Delivery pipe and injector assembly
19. Insulator
20. Injector gasket
B 21. Corrugated washer
A 22. Backup ring
A 23. O-ring
A 24. Backup ring
25. Injector
26. Delivery pipe, right
27. Delivery pipe, left

7EN1520

© Mitsubishi Motors Corporation Mar. 2000

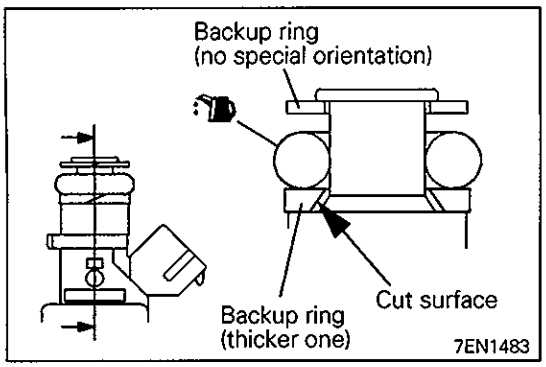

SERVICE POINTS OF INSTALLATION

◆A◆ INSTALLATION OF BACKUP RING / O-RING

(1) Install the backup rings and O-ring to the injector.
Install the backup ring (thicker one) in the injector so that its inner cut surface faces in the direction shown.

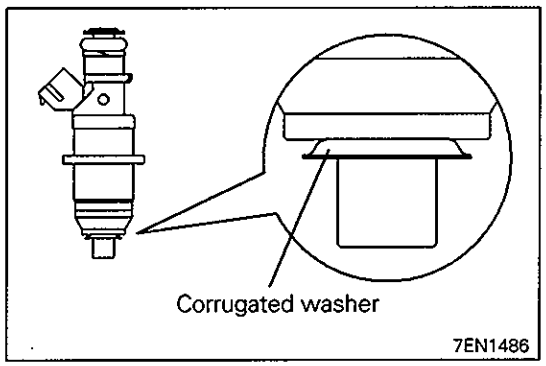

◆B◆ INSTALLATION OF CORRUGATED WASHER

(1) Coat the corrugated washer with white vaseline and install it to the injector as shown.

Caution

- **Always replace the corrugated washer with new one. Reused corrugated washer can cause fuel or gas leaks.**

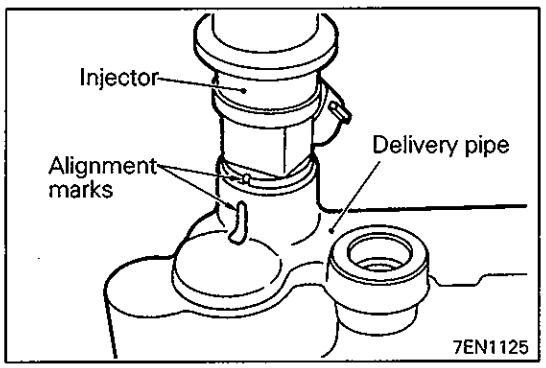

◆C◆ INSTALLATION OF DELIVERY PIPE AND INJECTOR ASSEMBLY

(1) Apply spindle oil or gasoline to the O-ring in the injector.
(2) Insert the injectors straight into the injector mounting holes in the delivery pipe.
(3) Turn each injector. If it does not turn smoothly, remove it and check the O-ring for damage. If the O-ring is damaged, replace it with a new one; then, reinstall the injector and check to see if it turns smoothly.
(4) Align the alignment mark on each injector with that on the delivery pipe.
(5) Install the delivery pipe & injector assembly into the cylinder head.
(6) Tighten the bolt at the center of each delivery pipe to the specified torque. Then tighten bolts on both ends to the specified torque.

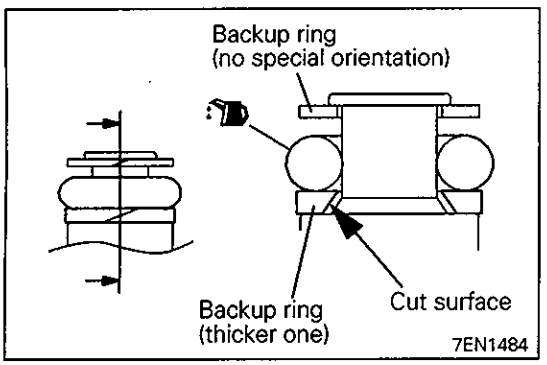

◆D◆ INSTALLATION OF BACKUP RING / O-RING / FUEL CENTER PIPE

(1) Fit the backup rings and O-ring to both ends of the fuel center pipe. Mount the backup ring (thicker one) so that its inner cut surface faces in the direction shown.
(2) Coat the O-rings on both ends of the pipe with spindle oil or gasoline.
(3) Insert the fuel center pipe straight into the mounting hole in the delivery pipe. Insert it all the way into the hole, ensuring that it does not twist.

© Mitsubishi Motors Corporation Mar. 2000

(4) Tighten the bolts on both ends of the fuel center pipe to the specified torque.

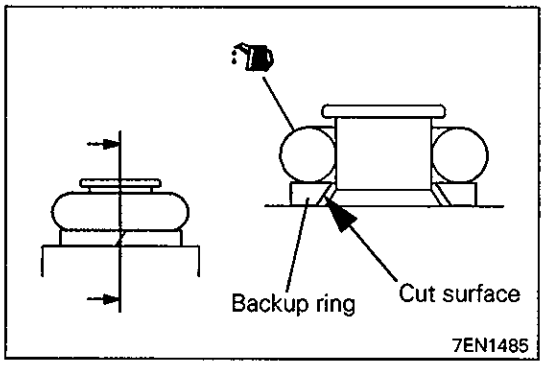

◆E◆ INSTALLATION OF BACKUP RING / O-RING / FUEL PRESSURE SENSOR

(1) Fit the backup ring to the fuel pressure sensor so that its inner cut surface faces in the direction shown.

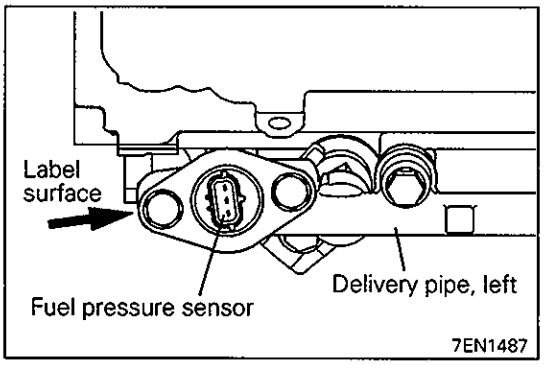

(2) Being attentive to the shape of the connector and label surface of the fuel pressure sensor, install the fuel pressure sensor in the direction shown.

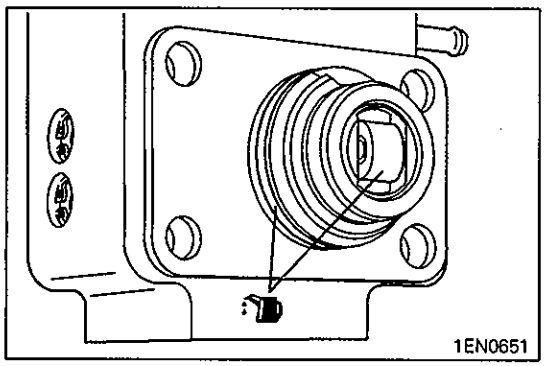

◆F◆ INSTALLATION OF FUEL PUMP / BACKUP RING / O-RING / FUEL FEED PIPE

(1) Apply engine oil to the roller of the fuel pump and O-ring.

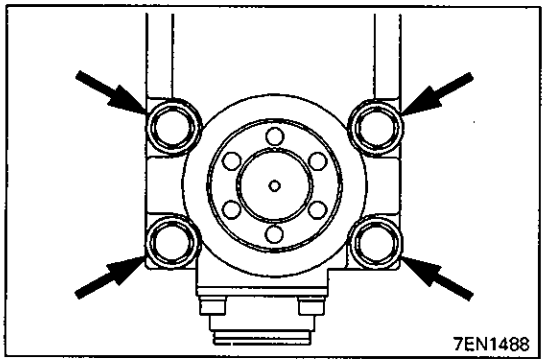

(2) Insert the fuel pump into the mounting hole in the cylinder head and lightly tighten the four bolts (slightly tighter than finger-tight).

© Mitsubishi Motors Corporation Mar. 2000

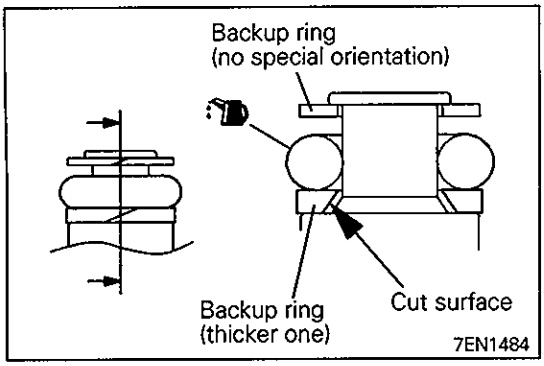

(3) Fit the backup rings and O-ring to both ends of the fuel feed pipe. Mount the backup ring (thicker one) so that its inner cut surface faces in the direction shown.
(4) Coat the O-rings on both ends of the pipe with spindle oil or gasoline.
(5) Insert the fuel feed pipe straight into the mounting hole in the fuel pump. Insert it all the way into the hole, ensuring that it does not twist.
(6) Tighten the bolts on both ends of the pipe to the specified torque.

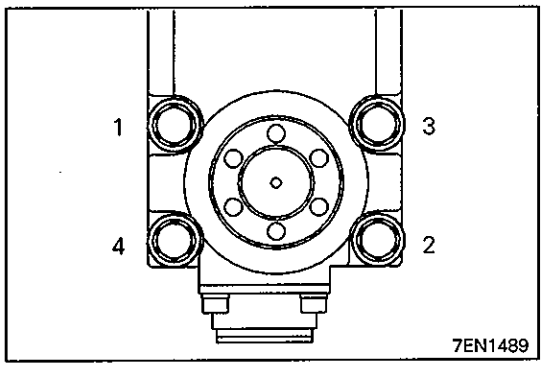

(7) Using a torque wrench (minimum graduations), follow these steps to tighten the fuel pump mounting bolts.
  1) Tighten the bolts to 5 Nm {0.5 kgm, 3.6 ft.lbs.} in the order shown.
  2) Tighten the bolts to 17 Nm {1.7 kgm, 12 ft.lbs.} in the order shown. Variations in torque among the four bolts should be within 2 Nm {0.2 kgm, 1.5 ft.lbs.}.

Caution
- **Strictly observe the tightening order. A leak and other problem could result if the torque specifications and torquing order are not met.**

7. EXHAUST MANIFOLD

REMOVAL AND INSTALLATION

(Two-camshaft 12-valve engine for front wheel drive vehicle)

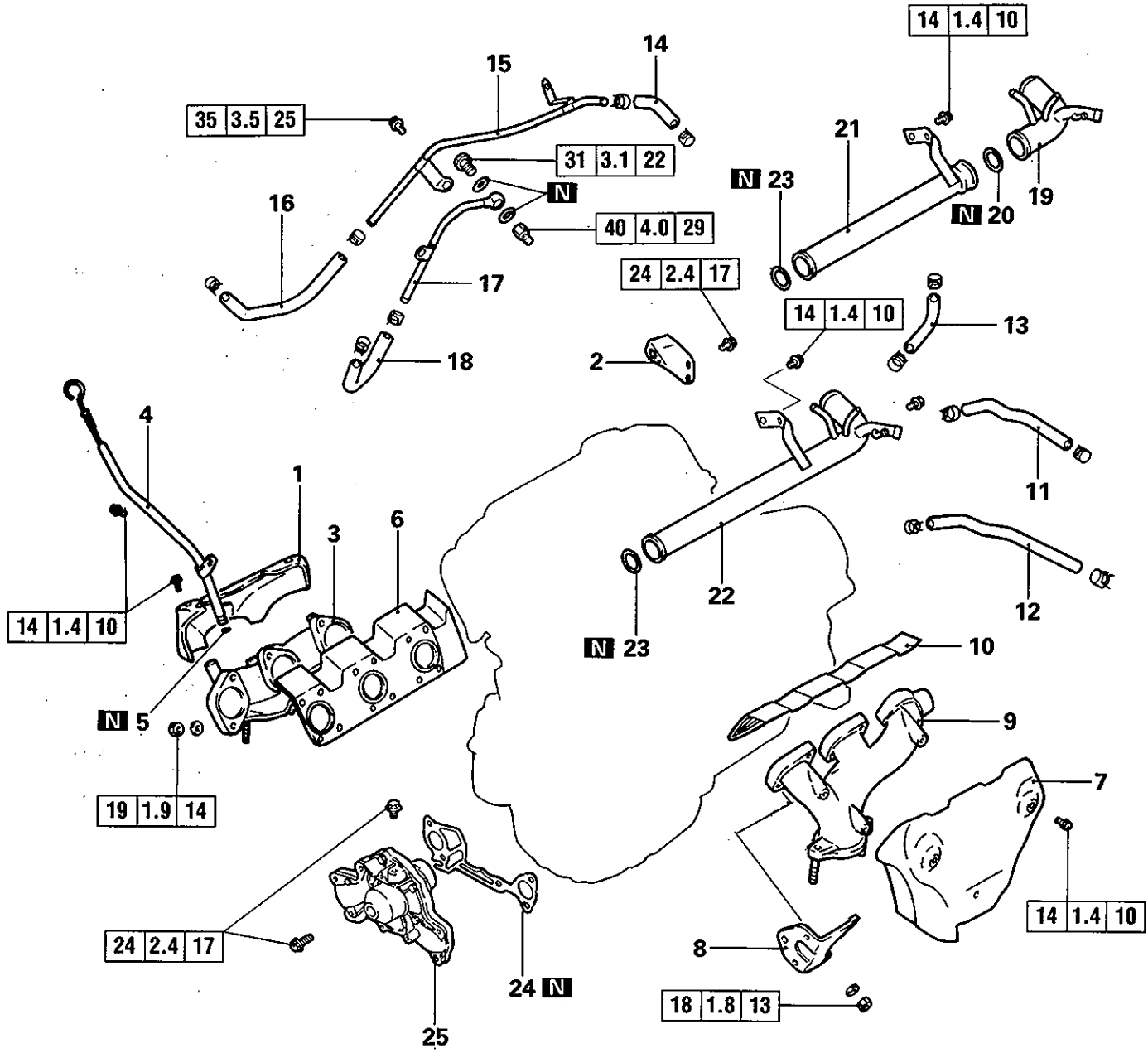

Removal steps

1. Heat protector
2. Engine hanger right
3. Exhaust manifold right
4. Oil level gauge assembly
5. O-ring
- ◆B◆ 6. Exhaust manifold gasket
7. Heat protector right
8. Bracket
9. Exhaust manifold left
- ◆B◆ 10. Exhaust manifold gasket
11. Water hose
12. Water hose
13. Water by-pass hose
14. Water hose
15. Water pipe assembly B
16. Water hose
17. Water pipe assembly A
18. Water hose

(for Europe, Hong Kong, Singapore)

19. Water inlet pipe B
- ◆A◆ 20. O-ring
- ◆A◆ 21. Water inlet pipe A
- ◆A◆ 22. Water inlet pipe – A/T
- ◆A◆ 23. O-ring
24. Water pump
25. Water pump gasket

(M/T)

7EN0359

© Mitsubishi Motors Corporation Aug. 1994

REMOVAL AND INSTALLATION

(Two-camshaft 12-valve engine for rear wheel drive vehicle)

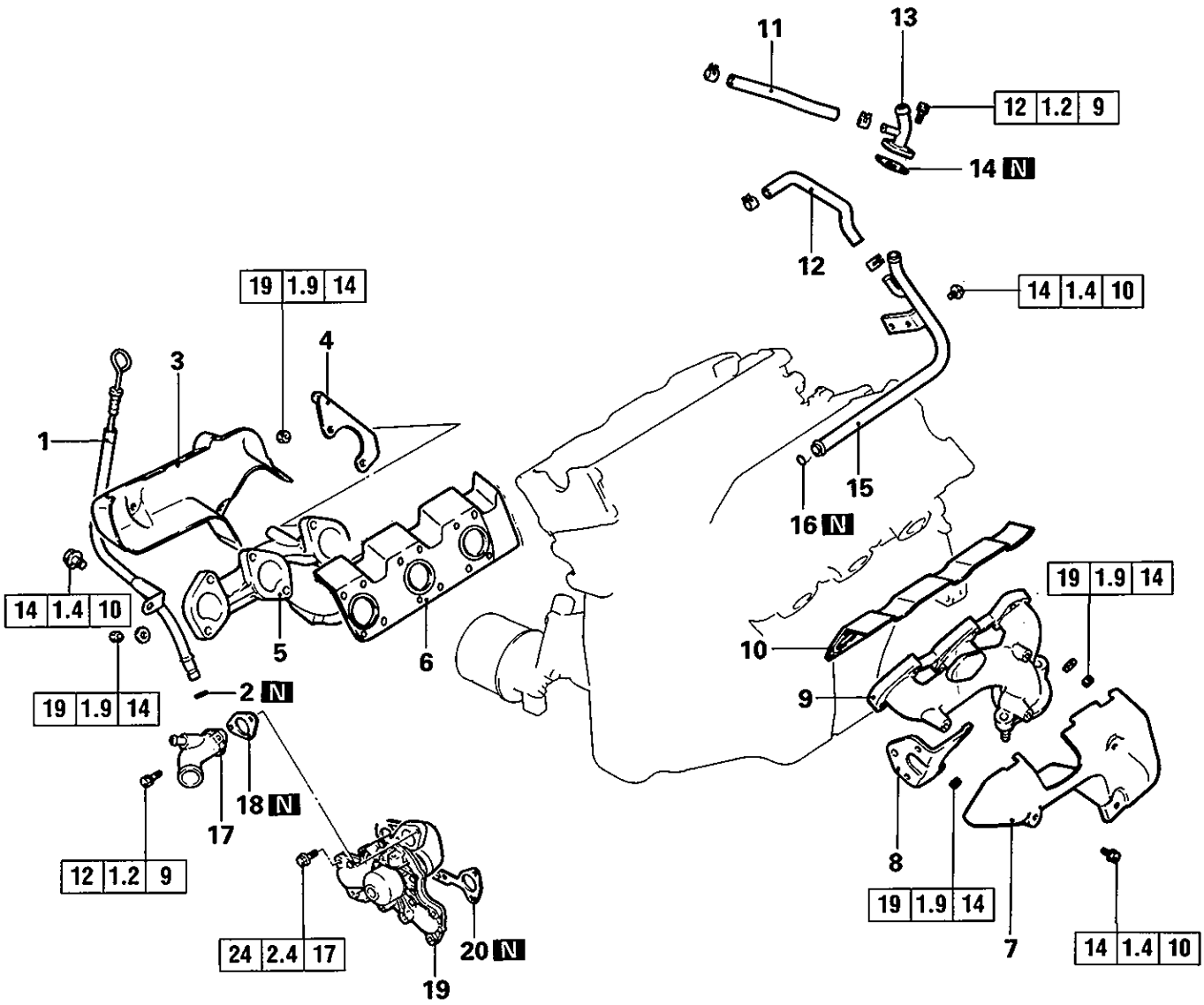

Removal steps

1. Oil level gauge assembly
2. O-ring
3. Heat protector, right
4. Engine hanger
5. Exhaust manifold, right
◆B◆ 6. Exhaust manifold gasket
7. Heat protector, left
8. Bracket
9. Exhaust manifold, left
◆B◆ 10. Exhaust manifold gasket
11. Water hose
12. Water hose A
13. Heater pipe assembly
14. Heater pipe gasket
◆A◆ 15. Water pipe assembly
◆A◆ 16. O-ring
17. Water inlet fitting
18. Water inlet fitting gasket
19. Water pump
20. Water pump gasket

7EN0360

© Mitsubishi Motors Corporation Aug. 1994

REMOVAL AND INSTALLATION

(Four-camshaft engine for front wheel drive vehicle – Without turbocharger)

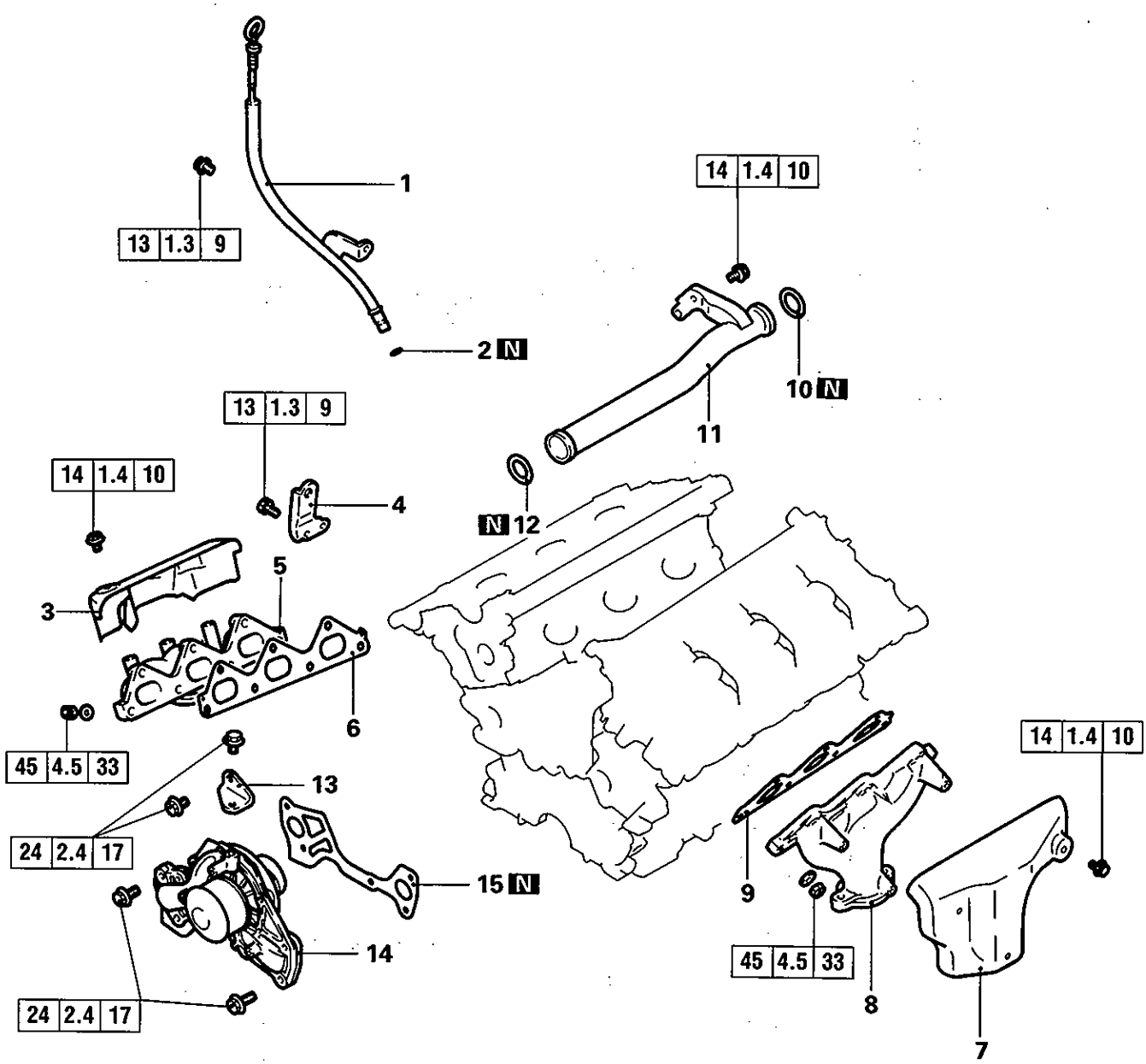

Removal steps

1. Oil level gauge assembly
2. O-ring
3. Heat protector, right
4. Engine hanger
5. Exhaust manifold, right
6. Exhaust manifold gasket
7. Heat protector, left
8. Exhaust manifold, left
9. Exhaust manifold gasket
◆A◆ 10. O-ring
◆A◆ 11. Water inlet pipe
◆A◆ 12. O-ring
13. Bracket
14. Water pump
15. Water pump gasket

7EN0361

© Mitsubishi Motors Corporation Dec. 1993

REMOVAL AND INSTALLATION

(Four-camshaft engine for front wheel drive vehicle – With turbocharger)

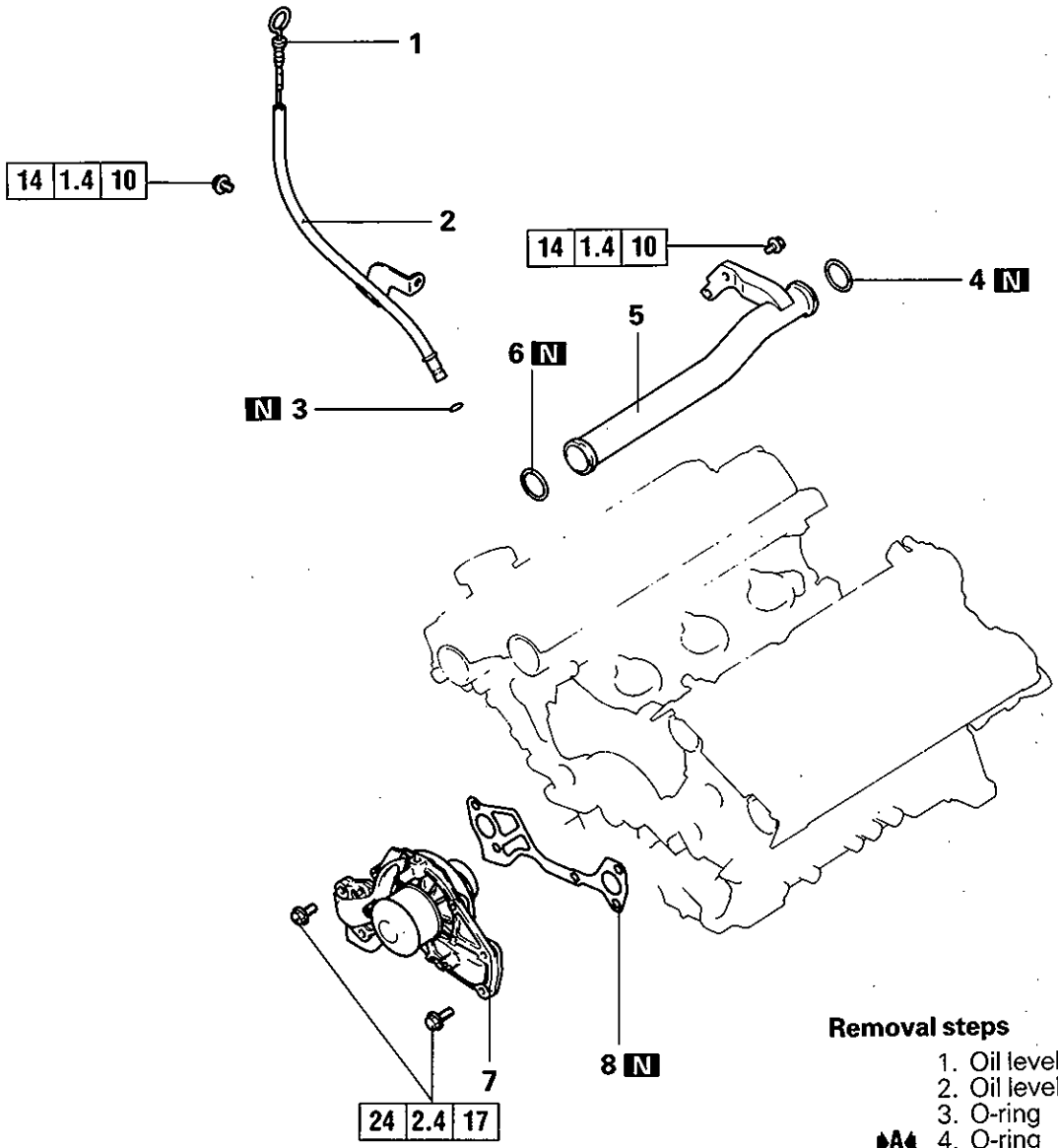

Removal steps

1. Oil level gauge
2. Oil level gauge guide
3. O-ring
◆A◆ 4. O-ring
◆A◆ 5. Water inlet pipe
◆A◆ 6. O-ring
7. Water pump
8. Water pump gasket

7EN0504

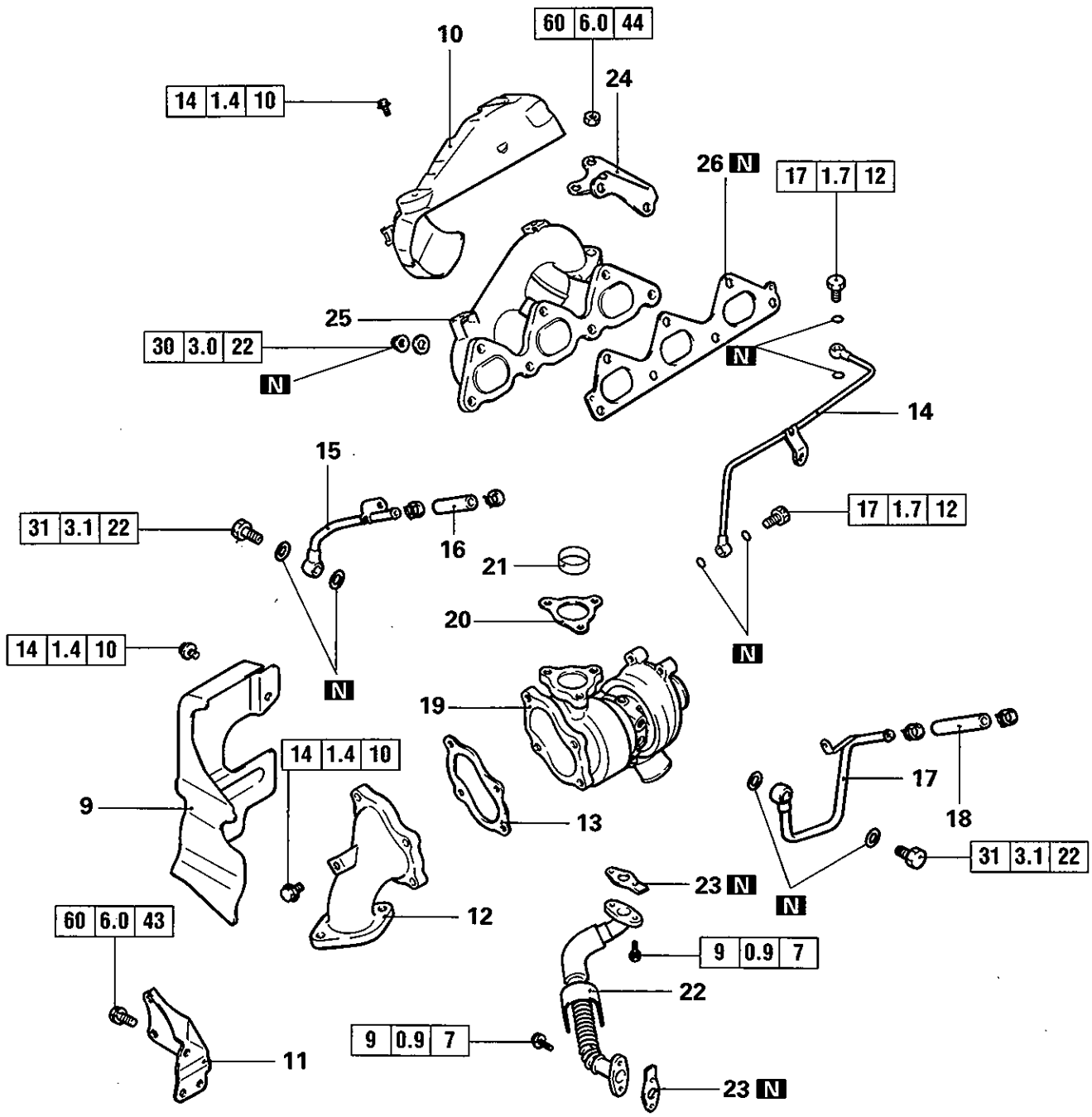

Removal steps

9. Heat protector B
10. Heat protector A
11. Turbocharger stay
12. Exhaust fitting
13. Exhaust fitting gasket
14. Oil pipe
15. Water pipe A, right
16. Water hose
17. Water pipe B, right
18. Water hose
19. Turbocharger, right
20. Turbocharger gasket
21. Ring
22. Oil return pipe, right
23. Oil return pipe gasket
24. Exhaust manifold stay, right
◆D◆ 25. Exhaust manifold, right
26. Exhaust manifold gasket

7IN0120

© Mitsubishi Motors Corporation Dec. 1993

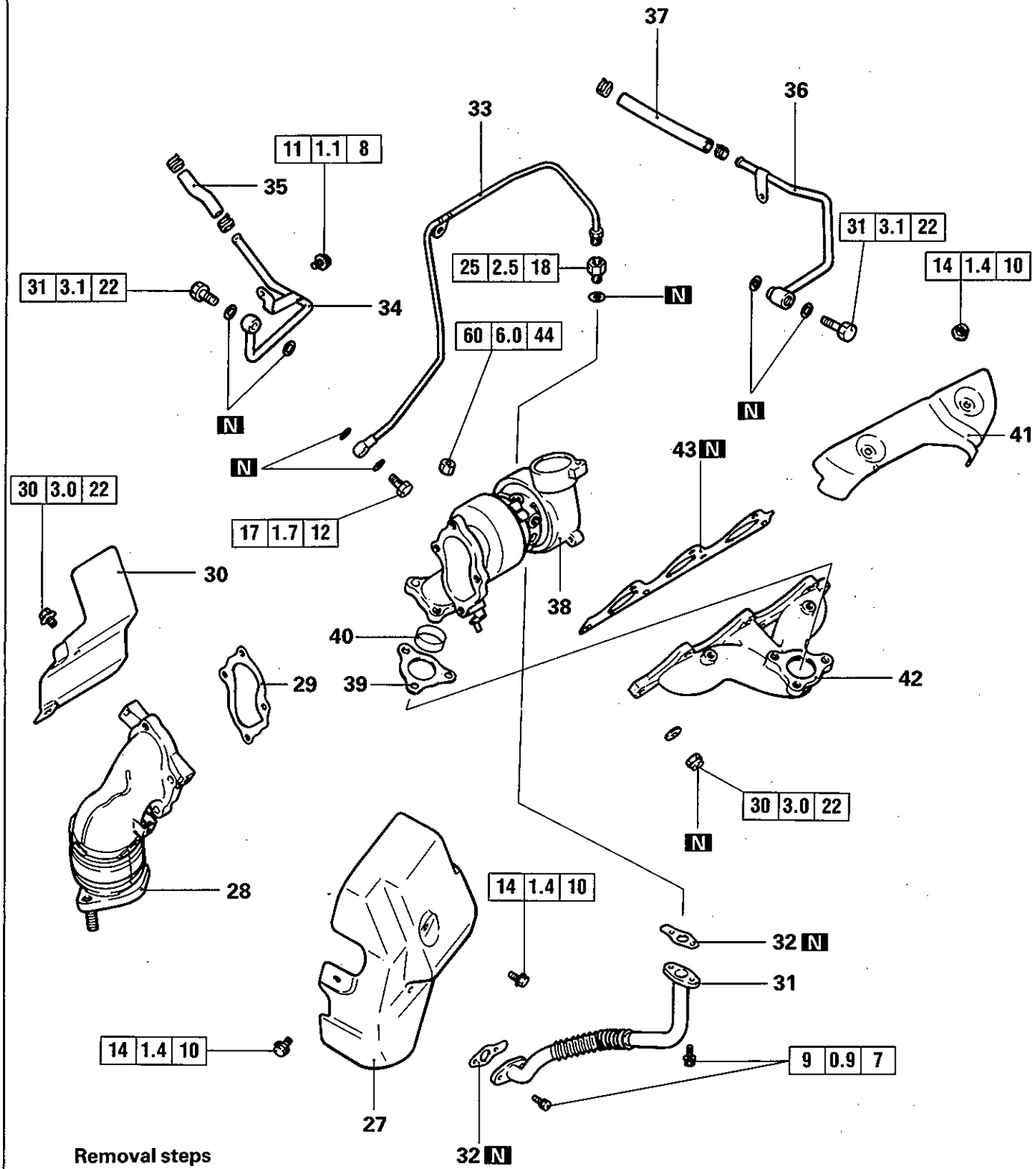

Removal steps

27. Heat protector D
28. Exhaust fitting, left
29. Exhaust fitting gasket, left
30. Heat protector
31. Oil return pipe
32. Oil return pipe gasket
33. Oil pope
34. Water pipe B, left
35. Water hose
36. Water pipe A, left
37. Water hose
38. Turbocharger, left
39. Turbocharger gasket
40. Ring
41. Heat protector E
◆C◆ 42. Exhaust manifold, left
43. Exhaust manifold gasket

7IN0121

© Mitsubishi Motors Corporation Dec. 1993

REMOVAL AND INSTALLATION

(Four-camshaft engine for rear wheel drive vehicle)

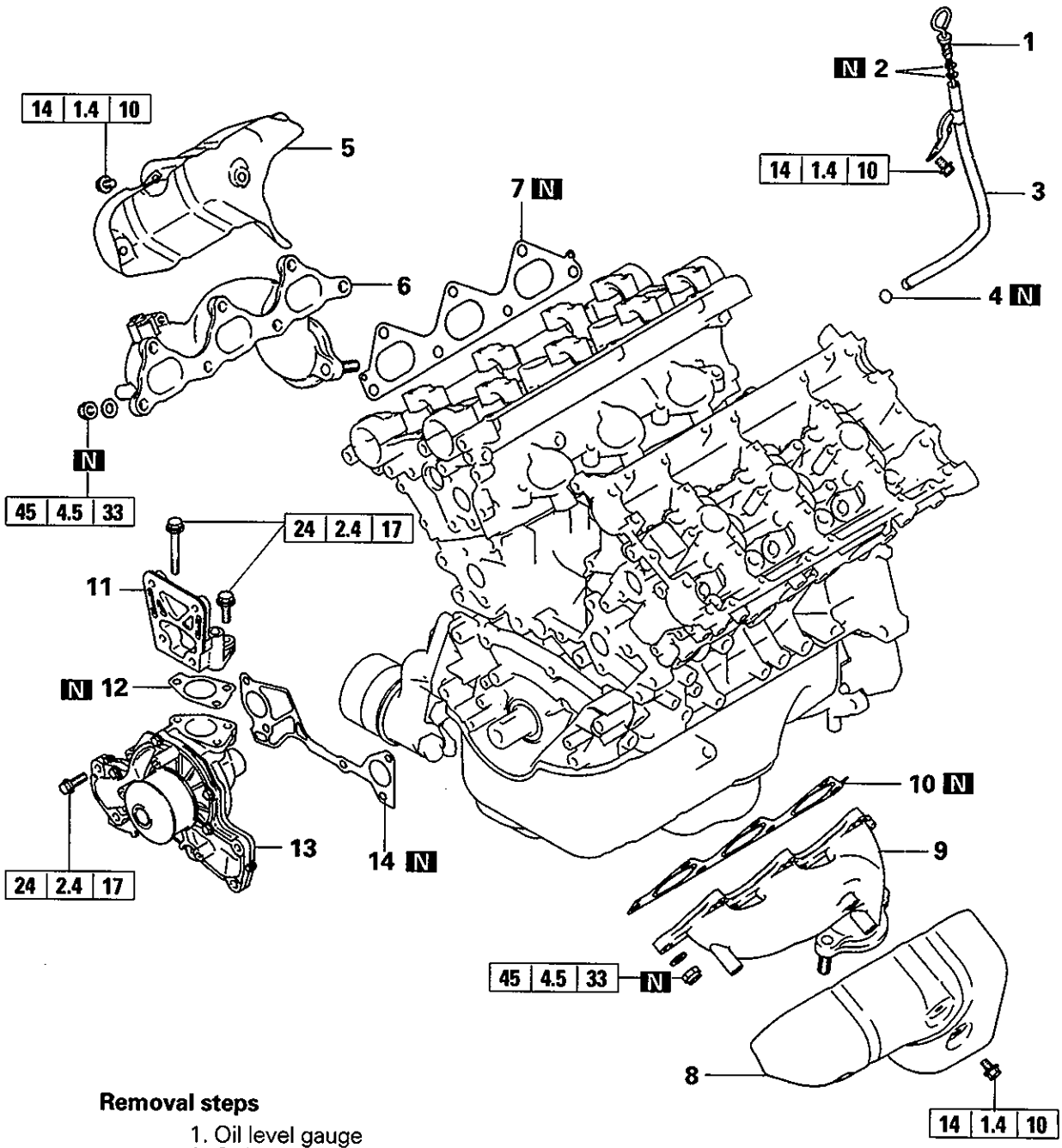

Removal steps

1. Oil level gauge
2. O-ring – 1995 models and later
3. Oil level gauge guide
4. O-ring
5. Heat protector, right
6. Exhaust manifold, right
7. Exhaust manifold gasket, right
8. Heat protector, left
9. Exhaust manifold, left
10. Exhaust manifold gasket, left
11. Water pump fitting
12. Gasket
13. Water pump
14. Water pump gasket

7EN0786

© Mitsubishi Motors Corporation Aug. 1994

REMOVAL AND INSTALLATION

(Two-camshaft 24-valve engine)

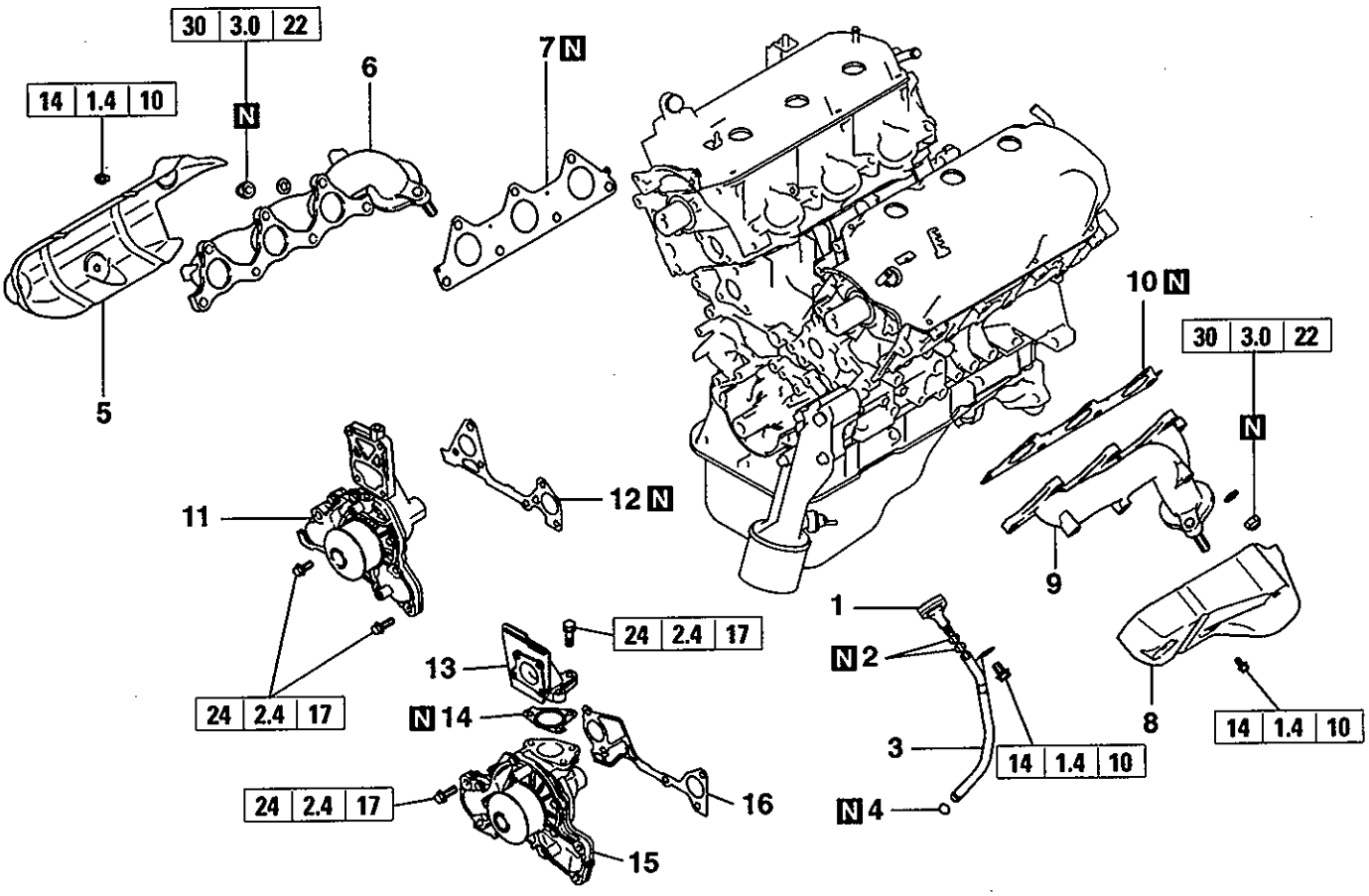

Removal steps

1. Oil level gauge
2. O-ring
3. Oil level gauge guide
4. O-ring
5. Heat protector, right
6. Exhaust manifold, right
7. Exhaust manifold gasket, right
8. Heat protector, left
9. Exhaust manifold, left
10. Exhaust manifold gasket, left
11. Water pump <Except 2001 model PAJERO>
12. Water pump gasket<Except 2001 model PAJERO>
13. Water pump fitting <2001 model PAJERO>
14. Gasket <2001 model PAJERO>
15. Water pump <2001 model PAJERO>
16. Water pump gasket <2001 model PAJERO>

7EN1561

© Mitsubishi Motors Corporation Mar. 2000

REMOVAL AND INSTALLATION

(GDI)

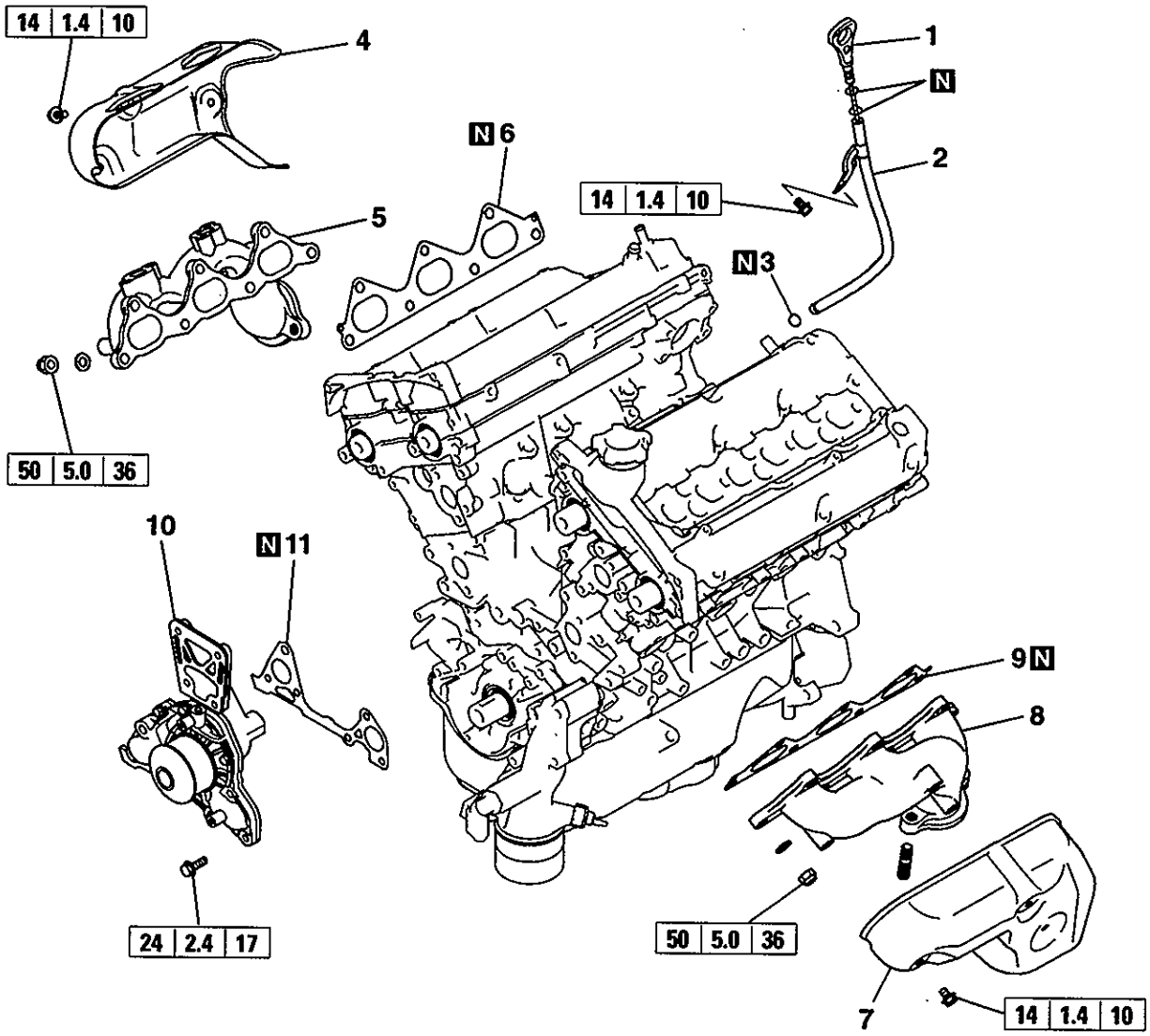

Removal steps

1. Oil level gauge
2. Oil level gauge guide
3. O-ring
4. Heat protector, right
5. Exhaust manifold, right
6. Exhaust manifold gasket
7. Heat protector, left
8. Exhaust manifold, left
9. Exhaust manifold gasket
10. Water pump
11. Gasket

© Mitsubishi Motors Corporation Mar. 2000

Intentionally blank

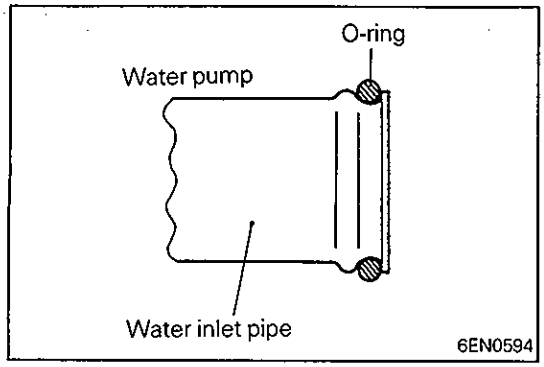

SERVICE POINTS OF INSTALLATION

◆A◆ INSTALLATION OF O-RING / WATER PIPE

(1) Wet the O-ring (with water) to facilitate assembly.

Caution

- **Keep the O-ring free of oil grease.**

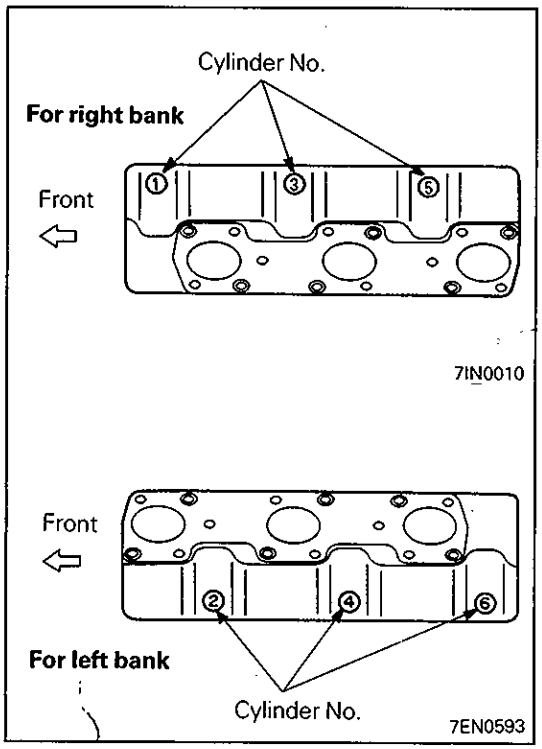

◆B◆ EXHAUST MANIFOLD GASKET – Two-camshaft engine

(1) Install gaskets with number ①, ③ and ⑤ embossed on their top side to the right bank (exhaust manifold (B) side) and install those with number ②, ④ and ⑥ to the left bank (exhaust manifold (A) side).

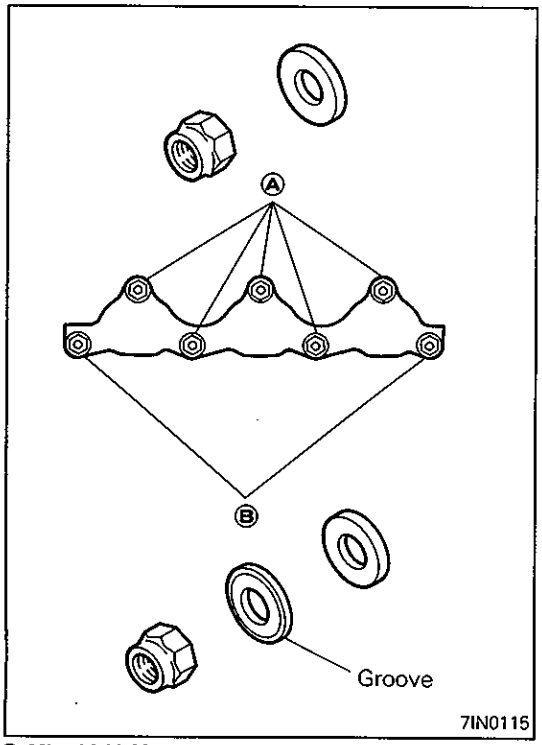

◆C◆ INSTALLATION OF LEFT EXHAUST MANIFOLD – Four-camshaft engine – With turbocharger

Tighten the nuts in the following order.

(1) Tighten five nuts Ⓐ to 30 Nm (3.0 kgm, 22 ft.lbs.).
(2) Tighten nuts Ⓑ to 50 Nm (5.0 kgm, 36 ft.lbs.).
(3) Back off nuts Ⓑ until a torque value of 10 Nm (1.0 kgm, 7 ft.lbs.) is achieved.
(4) Tighten nuts Ⓑ to 30 Nm (3.0 kgm, 22 ft.lbs.).

NOTE

(1) Fit the cone disc spring with the grooved side facing the nut.
(2) Install the nut, cone disc spring and washer in the order shown in the illustration.

© Mitsubishi Motors Corporation Aug. 1994

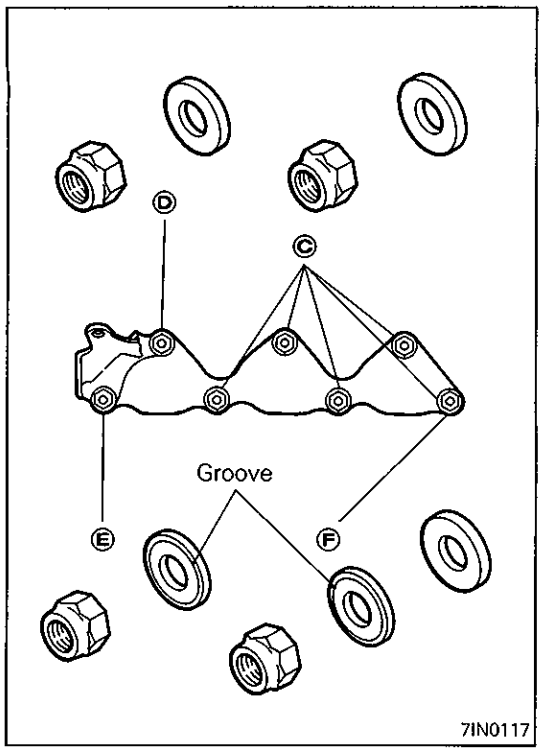

◆D◆ INSTALLATION OF RIGHT EXHAUST MANIFOLD – Four-camshaft engine – With turbocharger

Tighten the nuts in the following order.

(1) Tighten four nuts Ⓒ to 30 Nm (3.0 kgm, 22 ft.lbs.).
(2) Temporarily tighten the turbocharger to the exhaust manifold.
(3) Tighten nut Ⓓ to 30 Nm (3.0 kgm, 22 ft.lbs.).
(4) Tighten nuts Ⓔ and Ⓕ to 50 Nm (5.0 kgm, 36 ft.lbs.).
(5) Back off nuts Ⓔ and Ⓕ until a torque value of 10 Nm (1.0 kgm, 7 ft.lbs.) is achieved.
(6) Tighten nuts Ⓔ and Ⓕ to 30 Nm (3.0 kgm, 22 ft.lbs.).

NOTE
(1) Fit the cone disc spring with the grooved side facing the nut.
(2) Install the nut, cone disc spring and washer in the order shown in the illustration.

7a. TURBOCHARGER

DISASSEMBLY AND REASSEMBLY

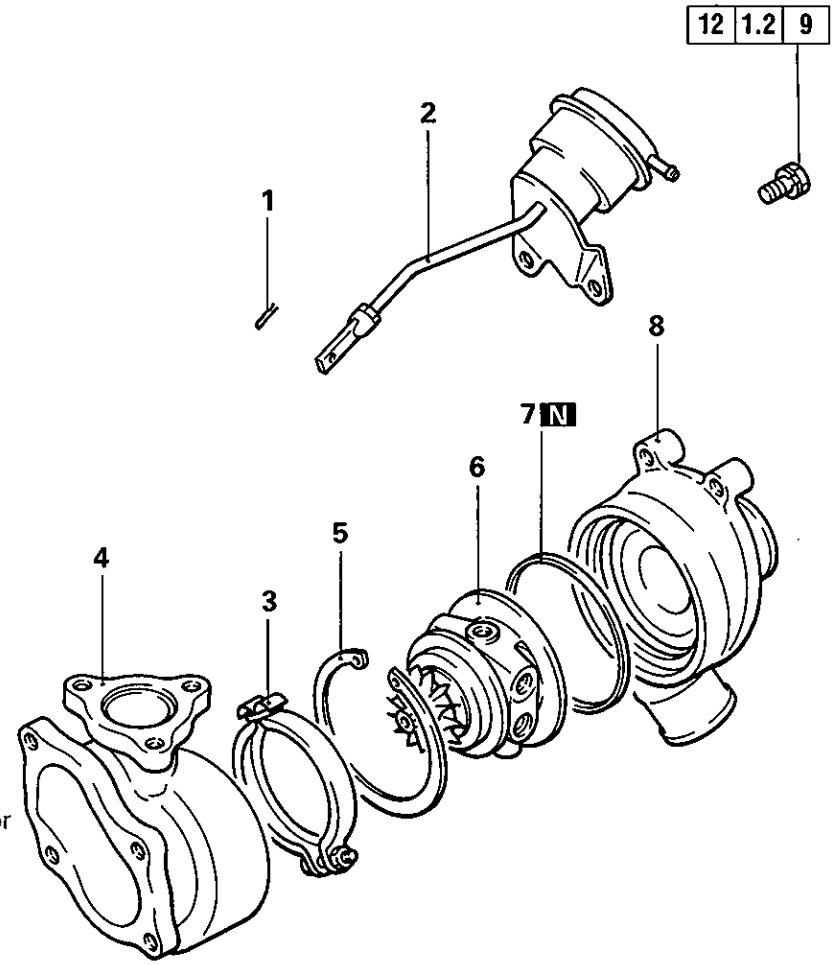

Disassembly steps

1. Snap pin
2. Turbocharger waste gate actuator
3. Coupling
◆D◆ 4. Turbine housing
◆C◆ 5. Snap ring
◆B◆ 6. Turbine wheel assembly
◆A◆ 7. O-ring
8. Compressor cover

INSPECTION

TURBOCHARGER

(1) Manually open and close the waste gate valve to make sure it operates freely.
(2) Inspect the oil passage in the cartridge for signs of deposits or blockage.
(3) Clean the inlet section of the compressor cover with a rag. Inspect it for signs of contact with the compressor turbine. If worn, replace it.

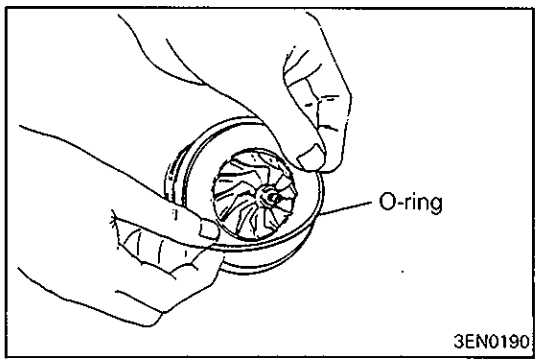

SERVICE POINTS OF REASSEMBLY

◆A◆ INSTALLATION OF O-RING

(1) Apply a light coat of engine oil to a new O-ring and fit it in the groove of the turbine wheel assembly.

© Mitsubishi Motors Corporation Sept. 1992

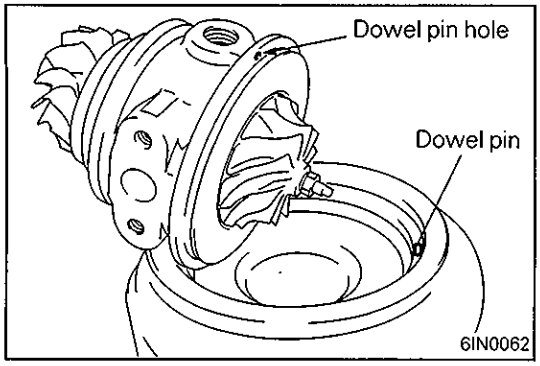

◗B◖ INSTALLATION OF TURBINE WHEEL ASSEMBLY

(1) Install the turbine wheel assembly to the compressor cover while aligning the dowel pin and the hole.

Caution
Use care not to damage the blades of the turbine wheel and compressor wheel.

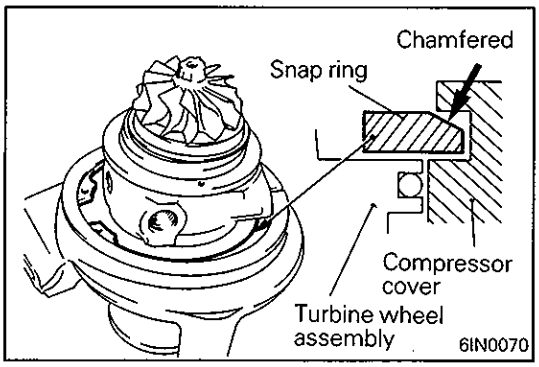

◗C◖ INSTALLATION OF SNAP RING

(1) Fit the snap ring with its chamfered side facing up.

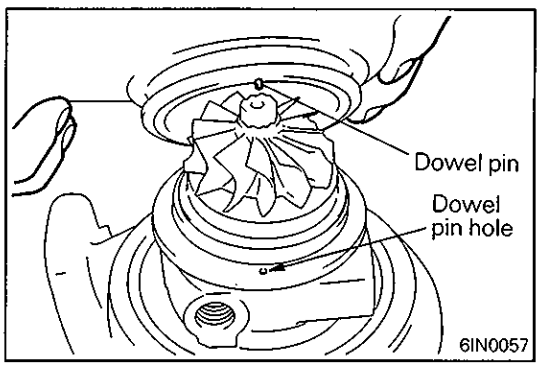

◗D◖ INSTALLATION OF TURBINE HOUSING

(1) Install the turbine housing while aligning the dowel pin and the hole.

Caution
Use care not to damage the blades of the turbine wheel.

© Mitsubishi Motors Corporation Sept. 1992

8. ROCKER ARMS AND CAMSHAFTS (TWO-CAMSHAFT ENGINE)

REMOVAL AND INSTALLATION

(12-valve engine front wheel drive vehicle)

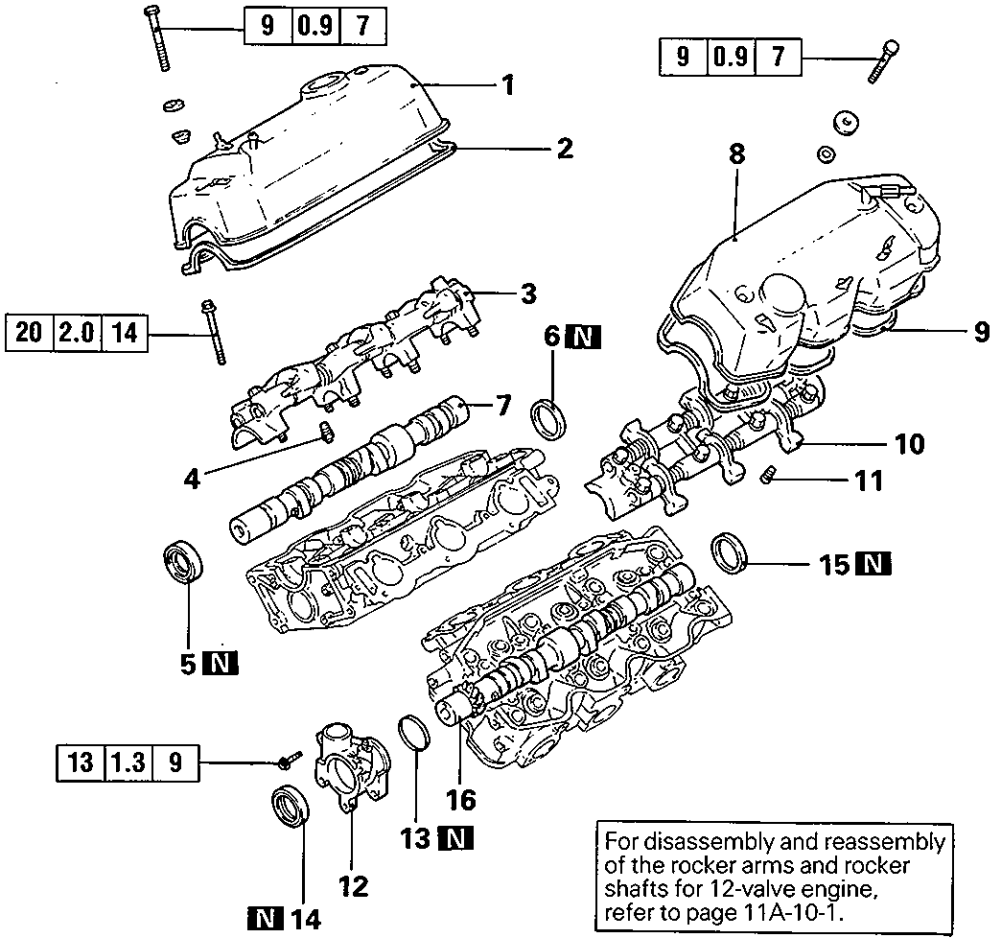

For disassembly and reassembly of the rocker arms and rocker shafts for 12-valve engine, refer to page 11A-10-1.

Removal steps

1. Rocker cover (B)
2. Gasket
3. Rocker arms, shafts and bearing caps
◇A◇ 4. Lash adjuster
5. Camshaft oil seal
6. Circular packing
7. Camshaft (right)
8. Rocker cover (A)
9. Gasket
10. Rocker arms, shafts and bearing caps
◇A◇ 11. Lash adjuster
12. Distributor adaptor
13. O-ring
14. Camshaft oil seal
15. Circular packing
16. Camshaft (left)

Installation steps

16. Camshaft (left)
13. O-ring
12. Distributor adaptor
◆B◆ 11. Lash adjuster
◆C◆ 10. Rocker arm, shafts and bearing caps
◆E◆ 15. Circular packing
◆F◆ 14. Camshaft oil seal
9. Gasket
◆H◆ 8. Rocker cover (A)
7. Camshaft (right)
◆B◆ 4. Lash adjuster
◆C◆ 3. Rocker arms shafts and bearing caps
◆E◆ 6. Circular packing
◆F◆ 5. Camshaft oil seal
2. Gasket
◆H◆ 1. Rocker cover (B)

7EN0362

© Mitsubishi Motors Corporation Aug. 1994

REMOVAL AND INSTALLATION

(12-valve engine rear wheel drive vehicle)

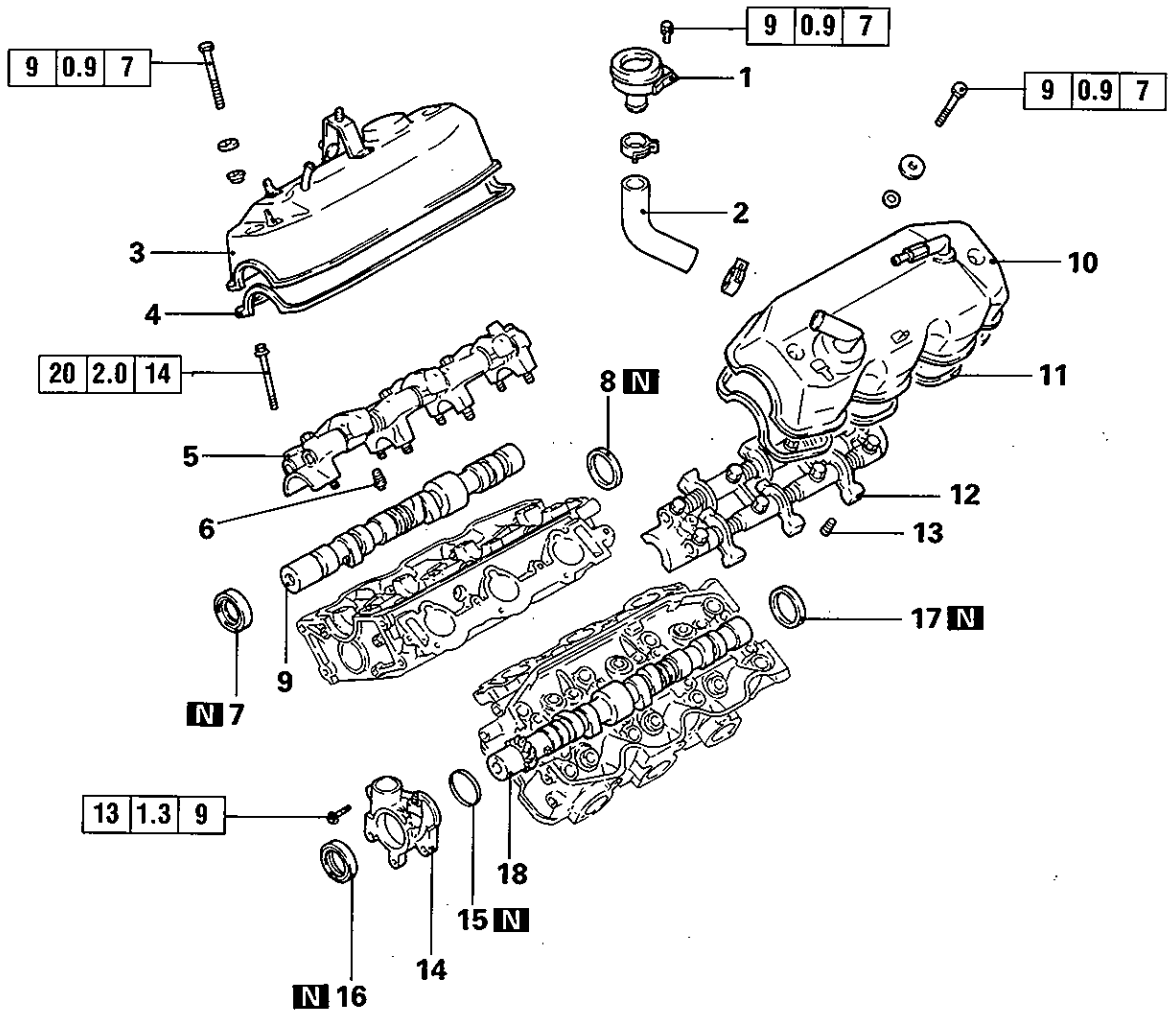

Removal steps

1. Oil filler
2. Oil filler tube
3. Rocker cover (B)
4. Gasket
5. Rocker arms, shafts and bearing caps
◇A◇ 6. Lash adjuster
7. Camshaft oil seal
8. Circular packing
9. Camshaft (right)
10. Rocker cover (A)
11. Gasket
12. Rocker arms, shafts and bearing caps
◇A◇ 13. Lash adjuster
14. Distributor adaptor
15. O-ring
16. Camshaft oil seal
17. Circular packing
18. Camshaft (left)

Installation steps

18. Camshaft (left)
15. O-ring
14. Distributor adaptor
◆B◆ 13. Lash adjuster
◆C◆ 12. Rocker arms, shafts and bearing caps
◆E◆ 17. Circular packing
◆F◆ 16. Camshaft oil seal
11. Gasket
◆H◆ 10. Rocker cover (A)
9. Camshaft (right)
◆B◆ 6. Lash adjuster
◆C◆ 5. Rocker arms, shafts and bearing caps
◆E◆ 8. Circular packing
◆F◆ 7. Camshaft oil seal
4. Gasket
◆H◆ 3. Rocker cover (B)
2. Oil filler tube
1. Oil filler

7EN0363

© Mitsubishi Motors Corporation Aug. 1994

REMOVAL AND INSTALLATION

(24-valve engine)

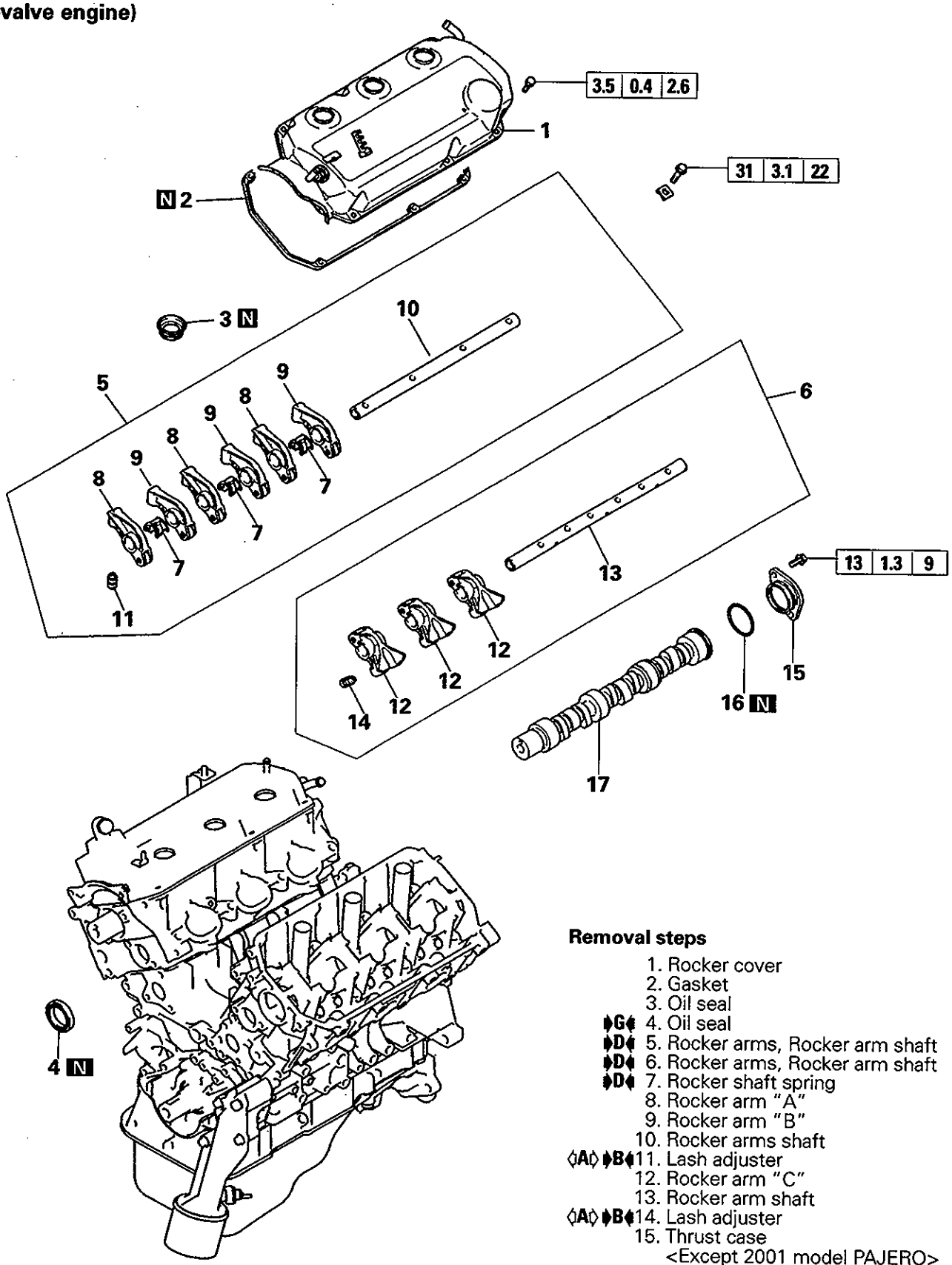

Removal steps

1. Rocker cover
2. Gasket
3. Oil seal

◆G◆ 4. Oil seal

◆D◆ 5. Rocker arms, Rocker arm shaft

◆D◆ 6. Rocker arms, Rocker arm shaft

◆D◆ 7. Rocker shaft spring

8. Rocker arm "A"
9. Rocker arm "B"
10. Rocker arms shaft

◇A◇ ◆B◆ 11. Lash adjuster

12. Rocker arm "C"
13. Rocker arm shaft

◇A◇ ◆B◆ 14. Lash adjuster

15. Thrust case
    <Except 2001 model PAJERO>
16. O-ring
    <Except 2001 model PAJERO>

◆A◆ 17. Camshaft

7EN0757

© Mitsubishi Motors Corporation Mar. 2000

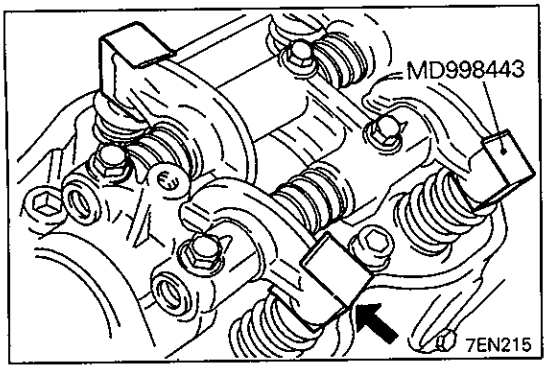

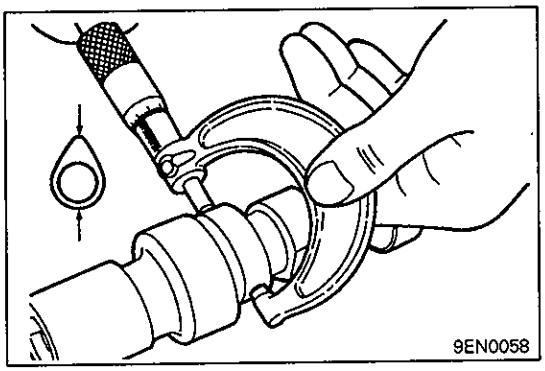

SERVICE POINTS OF DISASSEMBLY

◇A◇ REMOVAL OF LASH ADJUSTER

(1) Before removing the rocker arms and rocker arm shafts, install the special tools to prevent the lash adjusters from falling off.

INSPECTION

CAMSHAFT

(1) Measure the cam height.

		Standard value	Limit
Intake	12-valve engine	41.25 mm (1.6240 in.)	40.75 mm (1.6043 in.)
	24-valve engine – 6G72	37.58 mm (1.4795 in.)	37.08 mm (1.4598 in.)
	24-valve engine – 6G74 <Except 2001 model PAJERO>	37.71 mm (1.4846 in.)	37.21 mm (1.4650 in.)
	24-valve engine – 6G74 <2001 model PAJERO>	37.39 mm (1.4720 in.)	36.89 mm (1.4524 in.)
Exhaust	12-valve engine	41.25 mm (1.6240 in.)	40.75 mm (1.6043 in.)
	24-valve engine – 6G72	36.95 mm (1.4547 in.)	36.45 mm (1.4350 in.)
	24-valve engine – 6G74	37.14 mm (1.4622 in.)	36.64 mm (1.4425 in.)

ROCKER ARM

Refer to "INSPECTION" on page 11A-10-2.

ROCKER ARM SHAFT

Refer to "INSPECTION" on page 11A-10-2.

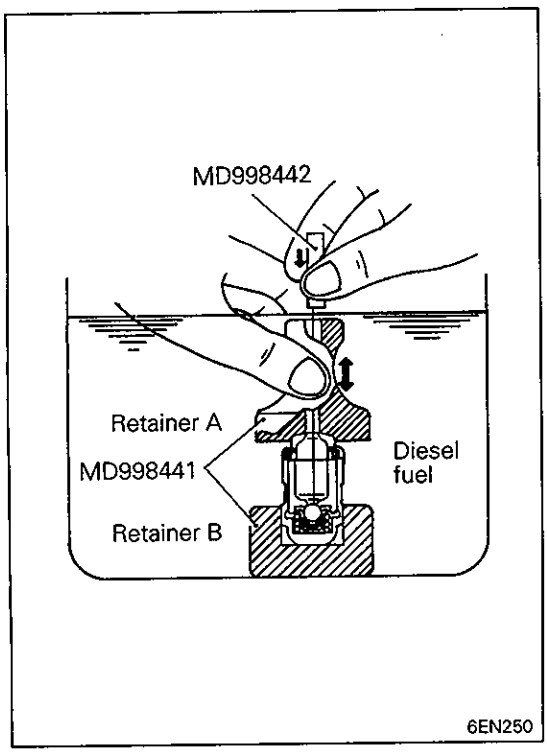

LEAK DOWN TEST OF LASH ADJUSTER

Caution

- **The lash adjuster is a precision part. Keep it free from dust and other foreign matters.**
- **Do not disassemble lash adjuster.**
- **When cleaning lash adjuster, use clean diesel fuel only.**

(1) Immerse the lash adjuster in clean diesel fuel.
(2) While lightly pushing down inner steel ball using the special tool (Air bleed wire MD998442), move the plunger up and down four or five times to bleed air.
Use of the special tool (Retainer MD998441) helps facilitate the air bleeding of the rocker arm mounted type lash adjuster.
(3) Remove the special tool (Air bleed wire MD998442) and press the plunger. If the plunger is hard to be pushed in, the lash adjuster is normal. If the plunger can be pushed in all the way readily, bleed the lash adjuster again and test again. If the plunger is still loose, replace the lash adjuster.

Caution

- **Upon completion of air bleeding, hold lash adjuster upright to prevent inside diesel fuel from spilling.**

© Mitsubishi Motors Corporation Mar. 2000

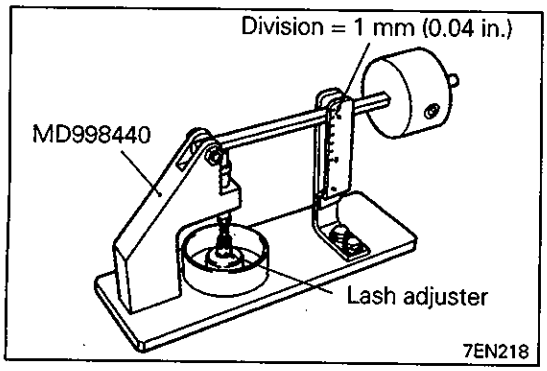

(4) After air bleeding, set lash adjuster on the special tool (Leak down tester MD998440).
(5) After plunger has gone down somewhat (0.2 – 0.5 mm), measure time taken for it to go down 1 mm. Replace if measured time is out of specification.

Standard value: 4 – 20 seconds / 1 mm (0.04 in.)
[Diesel fuel at 15 – 20°C (59 – 68°F)]

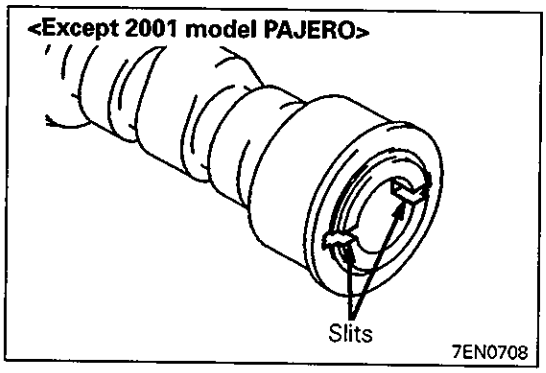

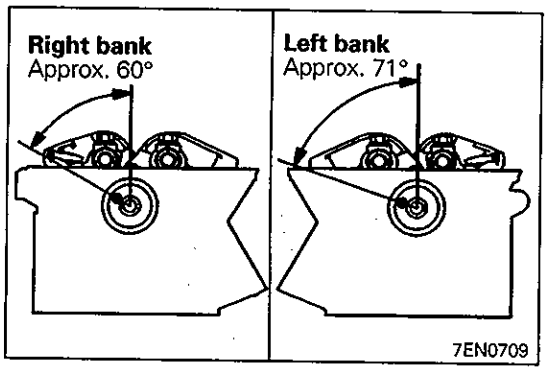

SERVICE POINTS OF REASSEMBLY

◆A◆ INSTALLATION OF CAMSHAFT

(1) Apply engine oil to journals and cams of the camshaft before installation.
Be sure to install the correct camshaft on the correct bank.

NOTE
(1) Slits [4 mm (0.157 in.) width] are provided at the rear end of the right bank camshaft. <Except 2001 model PAJERO>
(2) The camshaft with a longer overall length is for the left bank. <2001 model PAJERO>

(2) Position the dowel pins of the camshafts as shown in the illustrations.

© Mitsubishi Motors Corporation Mar. 2000

◆B◆ INSTALLATION OF LASH ADJUSTERS

(1) Insert the lash adjusters into the all rocker arms, being careful not to spill the diesel oil inside it.
(2) Install the special tool to prevent the lash adjuster from coming off.

◆C◆ INSTALLATION OF ROCKER ARMS, SHAFTS AND BEARING CAPS

(1) Apply a minimum amount of specified sealant on the four places of cylinder head.

NOTE
Be sure the sealing agent does not swell out onto the cam journal surface of the cylinder head. If it swells out, immediately wipe it off before it can dry.

Specified sealant:
3M NUT Locking No. 4171 or equivalent

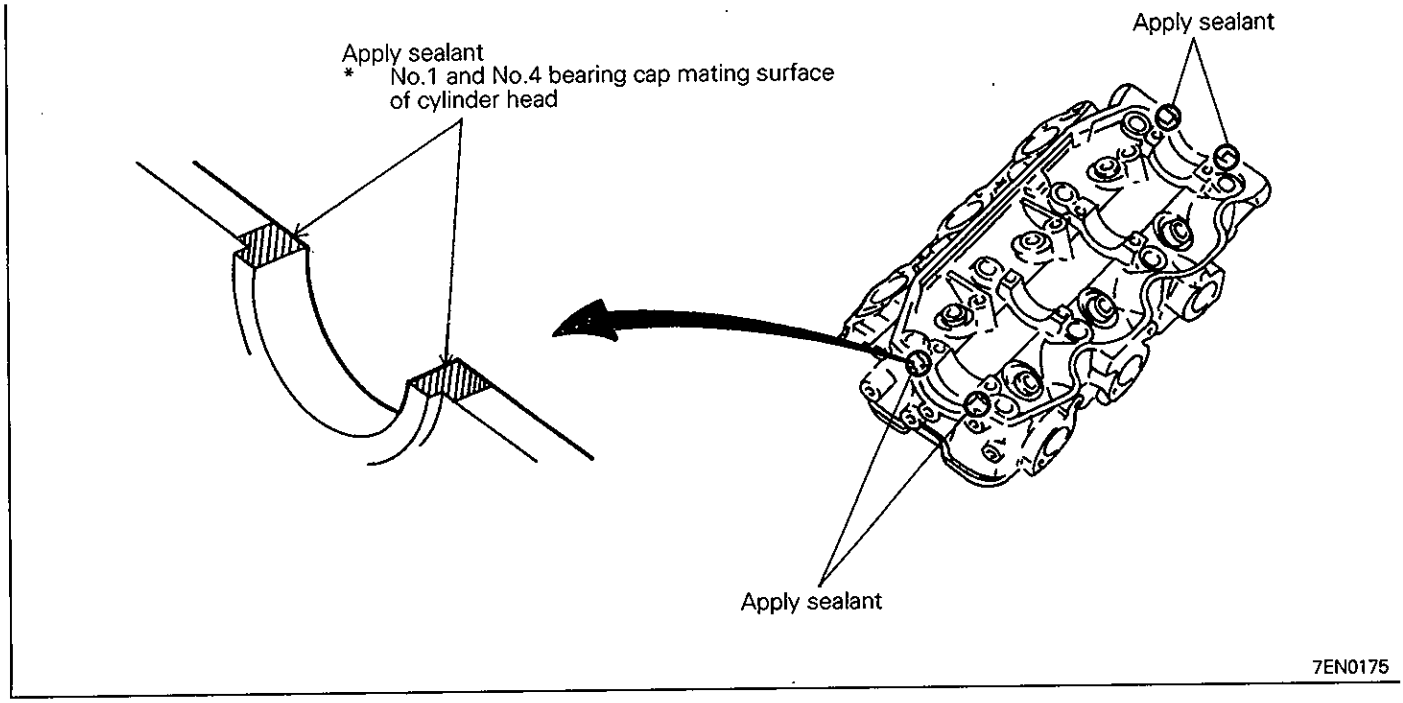

(2) Install the rocker arms, shafts and bearing caps such that the arrow mark on the bearing cap faces in the same direction as the arrow mark on the cylinder head.

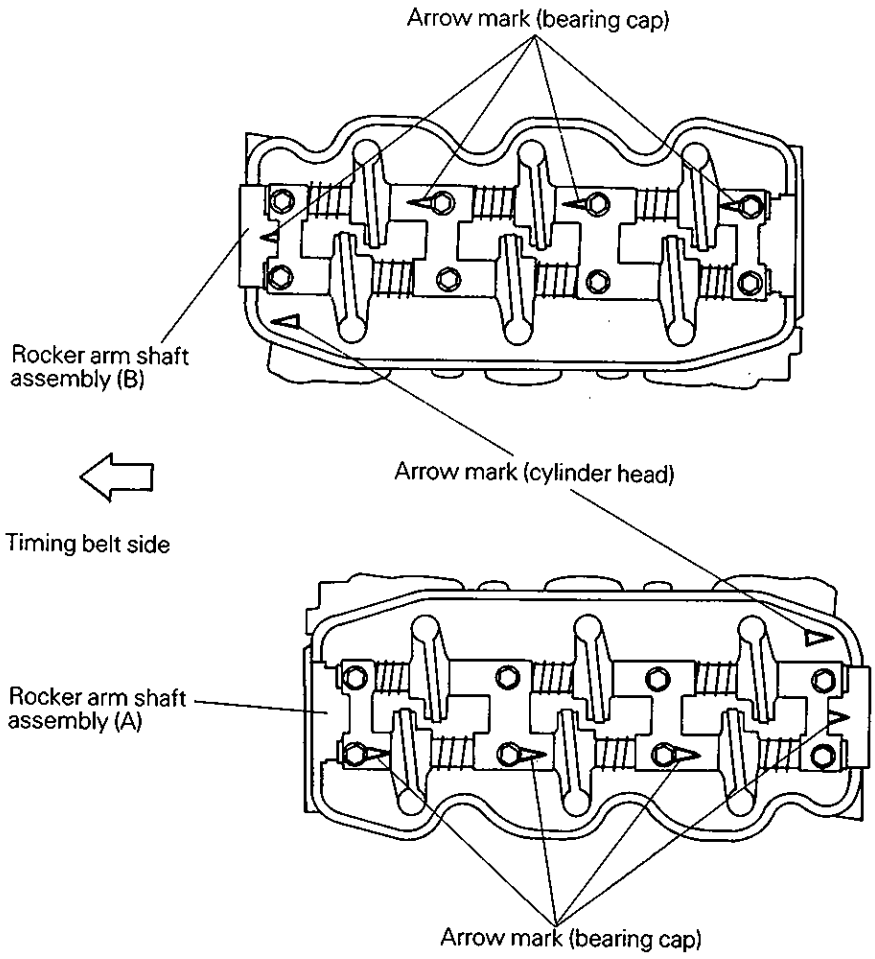

7EN0176

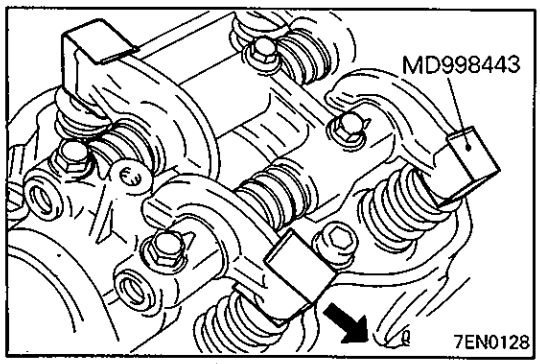

(3) Tighten the bearing cap bolts to the specified torque.
(4) Remove the special tools from all rocker arms.

© Mitsubishi Motors Corporation Aug. 1994

Added

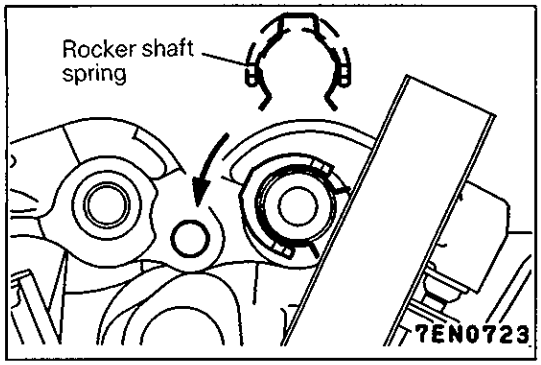

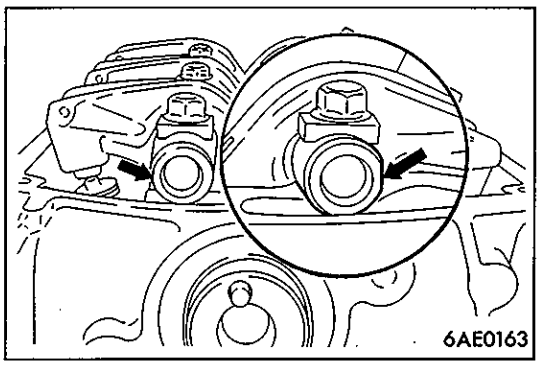

◗D◖ INSTALLATION OF ROCKER ARM, ROCKER ARM SHAFT AND ROCKER SHAFT SPRING

(1) Loosely tighten the intake rocker arm shaft bolts to the extent that all rocker arms do not push the valves.
(2) Install the rocker shaft spring from the above and position it so that it is right angles to the spark plug guide.

NOTE
Be sure to install the rocker shaft springs before installing the exhaust rocker arms and rocker arm shaft.

(3) Remove the special tools fixing the lash adjusters.
(4) Make sure that the flat surface of each rocker arm shaft is positioned as shown in the illustration.

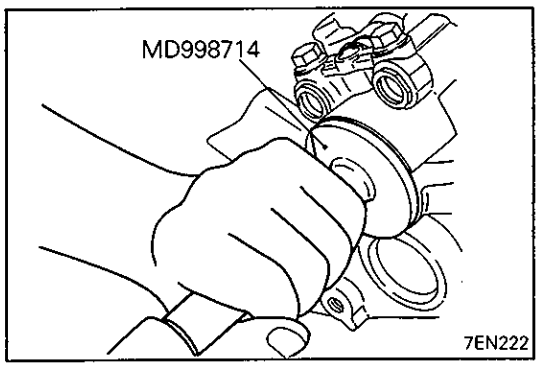

◗E◖ INSTALLATION OF CIRCULAR PACKING

(1) Install a 1.3 to 1.5 mm (0.052 to 0.059 in.) thick spacer to the special tool and drive in the circular packing.

NOTE:
Use of MD724328 spacer for transmission is recommended.

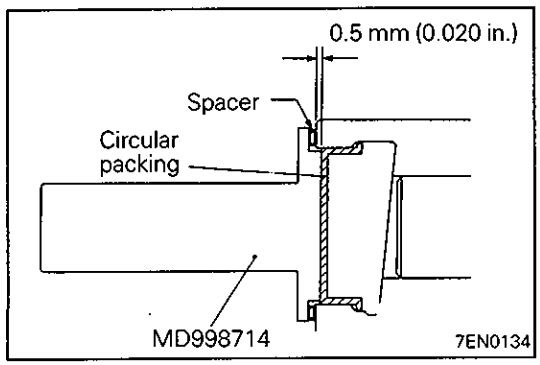

Caution
- **The packing is overdriven if no spacer is fitted to the special tool.**

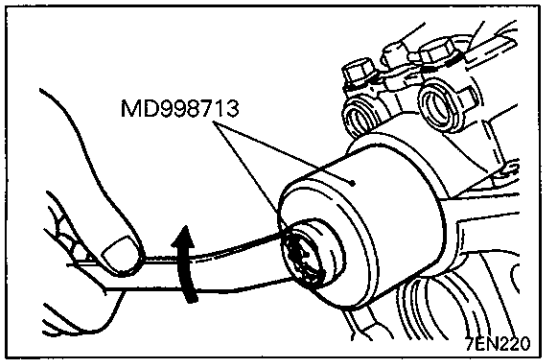

◆F◆ INSTALLATION OF CAMSHAFT OIL SEAL

(1) Apply a slight amount of engine oil all over the circumference of the camshaft oil seal lip section.
(2) Using the special tool, insert the oil seal.

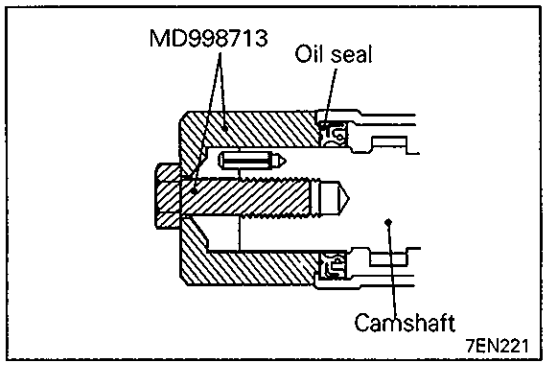

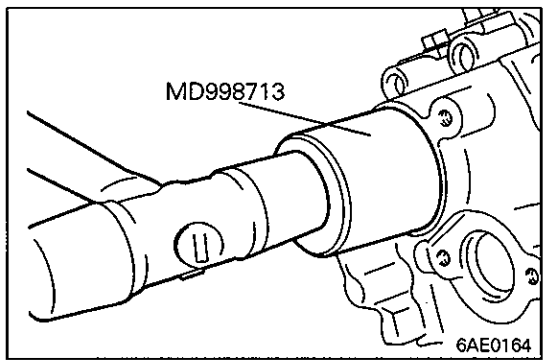

◆G◆ INSTALLATION OF CAMSHAFT OIL SEAL

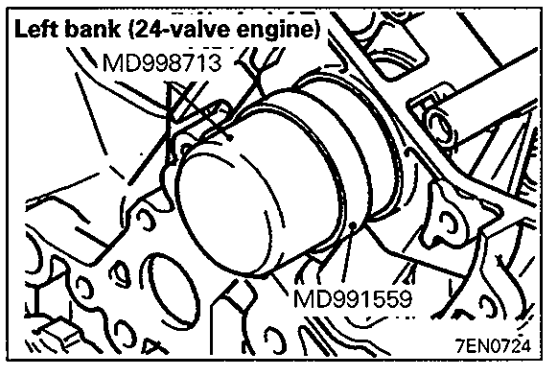

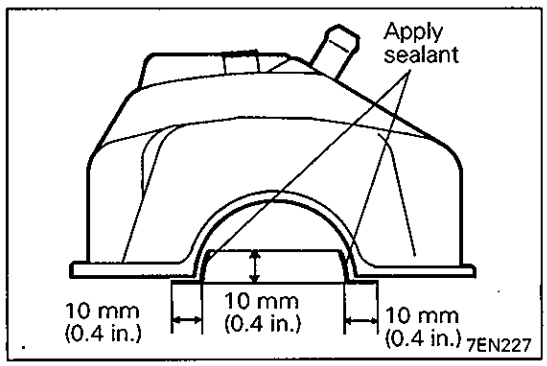

◆H◆ INSTALLATION OF ROCKER COVER

(1) Apply specified sealant on the area specified in the figure.
Specified sealant: 3M ATD Part No.8660 or equivalent

© Mitsubishi Motors Corporation Nov. 1995

NOTES

9. CAMSHAFTS, ROCKER ARMS AND BEARING CAPS (FOUR-CAMSHAFT ENGINE)

REMOVAL AND INSTALLATION

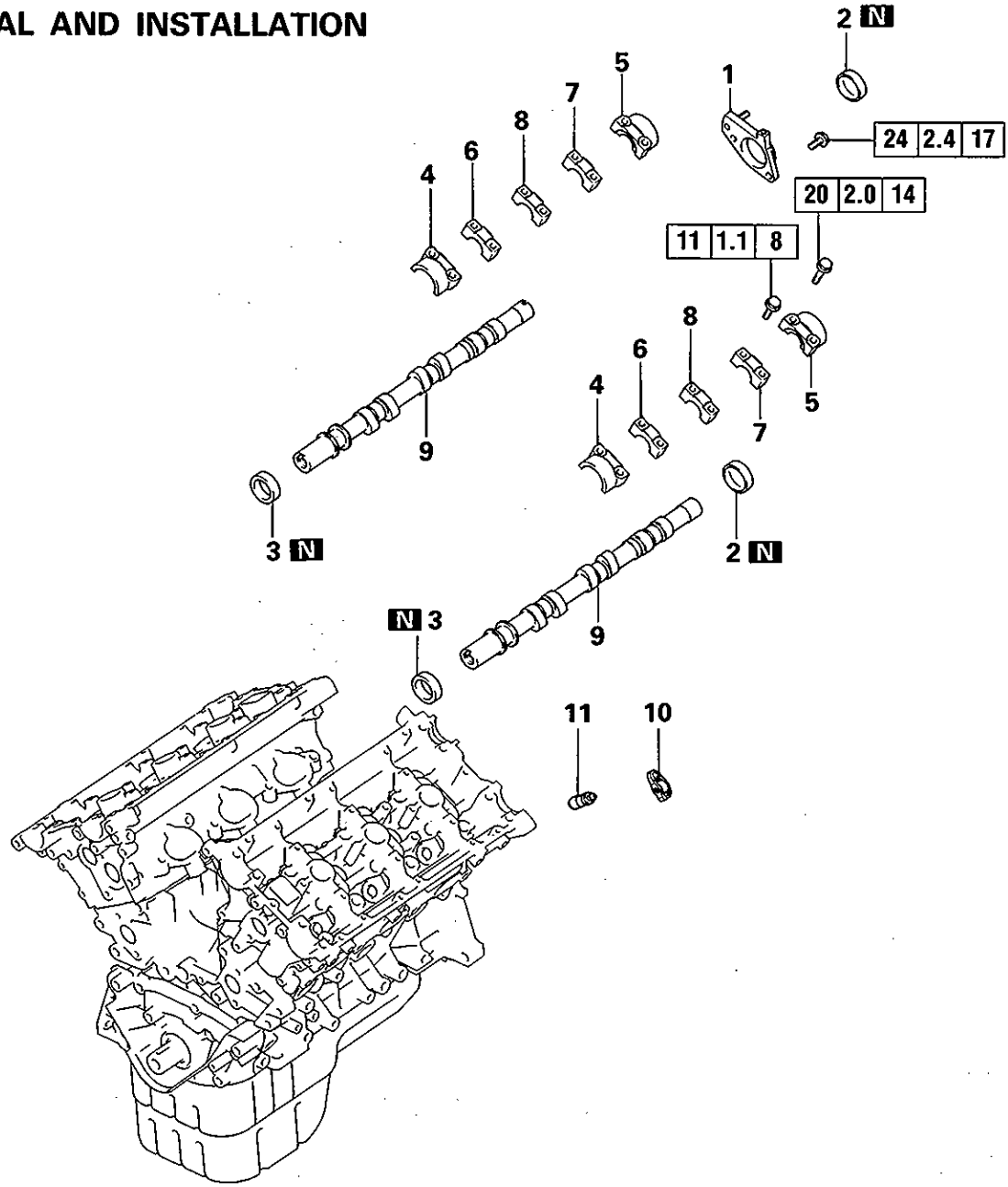

7EN0505

Removal steps

1. Crankshaft position sensor adaptor <Up to 1992 models>
◆C◆ 2. Circular packing <From 1993 models>
◆B◆ 3. Camshaft oil seal
◆A◆ 4. Bearing cap, front
◆A◆ 5. Bearing cap, rear
◆A◆ 6. Bearing cap, No.2
◆A◆ 7. Bearing cap, No.4
◆A◆ 8. Bearing cap, No.3
◆A◆ 9. Camshaft
10. Rocker arm
11. Lash adjuster

© Mitsubishi Motors Corporation Dec. 1993

INSPECTION

CAMSHAFT

(1) Check camshaft journals and cam lobes for excessive wear or damage. Replace if defects are evident. Measure the cam height and if the limit is exceeded, replace.

Standard value:
6G72 engine
SIGMA up to 1992 models; 3000GT for Europe and General Export
35.49 mm (1.3972 in.) ..... Intake
35.20 mm (1.3858 in.) ..... Exhaust
SIGMA after 1993 models; 3000GT for Australia
34.91 mm (1.3744 in.) ..... Intake, Exhaust
6G73 engine
34.91 mm (1.3744 in.) ..... Intake, Exhaust
6G74 engine
35.20 mm (1.3858 in.) ..... Intake
34.91 mm (1.3744 in.) ..... Exhaust

Limit:
6G72 engine
SIGMA up to 1992 models; 3000GT for Europe and General Export
34.99 mm (1.3776 in.) ..... Intake
34.70 mm (1.3661 in.) ..... Exhaust
SIGMA after 1993 models; 3000GT for Australia
34.41 mm (1.3547 in.) ..... Intake, Exhaust
6G73 engine
34.41 mm (1.3744 in.) ..... Intake, Exhaust
6G74 engine
34.70 mm (1.3661 in.) ..... Intake
34.41 mm (1.3547 in.) ..... Exhaust

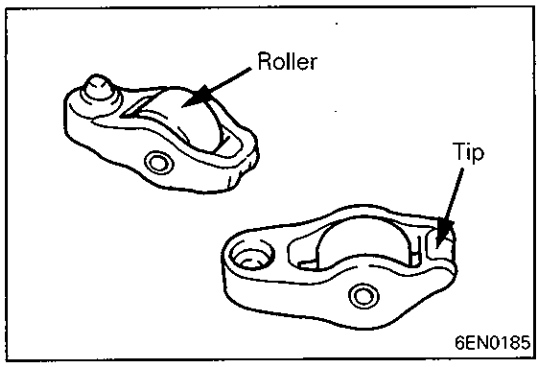

ROCKER ARM

(1) Visually check the roller and replace if dent, damage, or seizure is evident.
(2) Check the roller for smooth rotation. Replace if it binds or there is an excessive play.
(3) Check the valve contact surface for possible damage or seizure and replace as necessary.

LEAK DOWN TEST OF LASH ADJUSTER

Refer to "LEAK DOWN TEST OF LASH ADJUSTER" on pages 11A-8-3 and 11A-8-4. Also note the following:
When the lash adjuster is set on a tester, remove the adjusting screw of the tester and adjust it to the height of the lash adjuster as shown in the illustration.

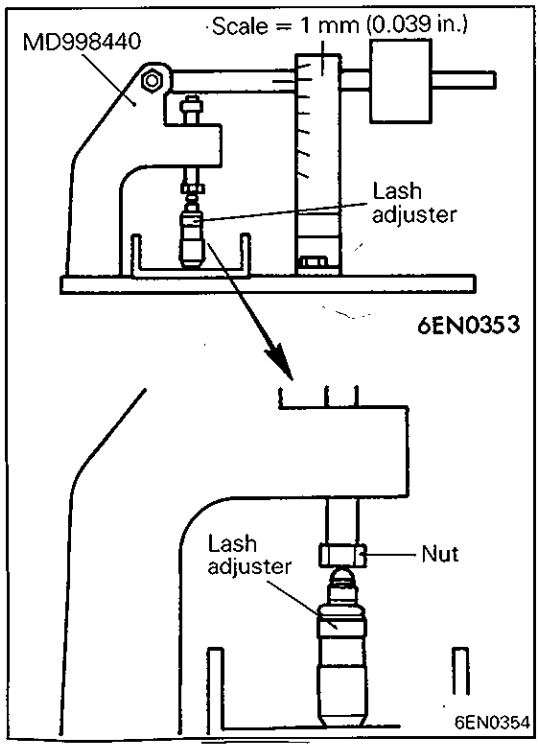

© Mitsubishi Motors Corporation Dec. 1993

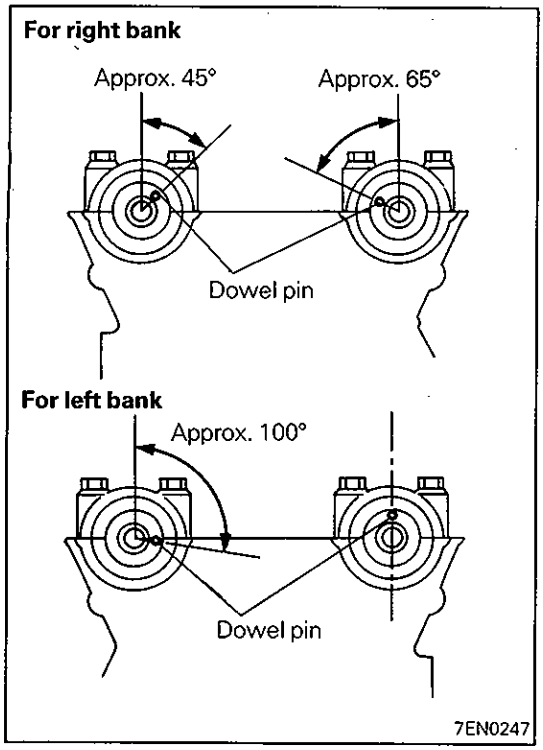

SERVICE POINTS OF INSTALLATION

◆A◆ INSTALLATION OF CAMSHAFT AND BEARING CAPS

(1) Rotate the crankshaft to place the No.1 cylinder at the top dead center.
(2) Check that the rocker arm is correctly positioned on the lash adjuster and valve.
(3) Install the camshaft dowel pins in the positions shown in the illustration.

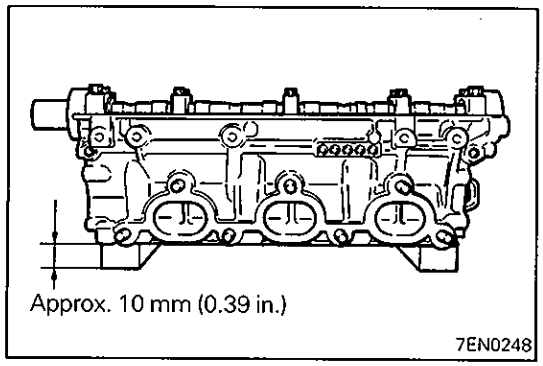

NOTE
When the bearing caps are to be installed on a removed cylinder head, keep the cylinder head bottom clear of the bench surface by about 10 mm (0.39 in.) since the valves are projecting from the cylinder head bottom surface.

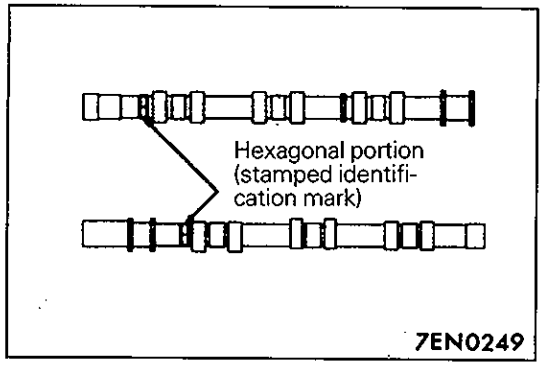

(4) The camshafts for the right and left banks are different. Be careful not to mix them. The camshaft for the left bank is longer in total length.

Identification mark

6G72 engine

SIGMA up to 1992 models

B	Intake
F	Exhaust

SIGMA from 1993 models

J	Intake
K	Exhaust

3000GT for Europe and General Export

B	Intake
D	Exhaust

3000GT for Australia

J	Intake
N	Exhaust

6G73 engine

Q	Intake
K	Exhaust

6G74 engine

P	Intake
K	Exhaust

© Mitsubishi Motors Corporation Dec. 1993

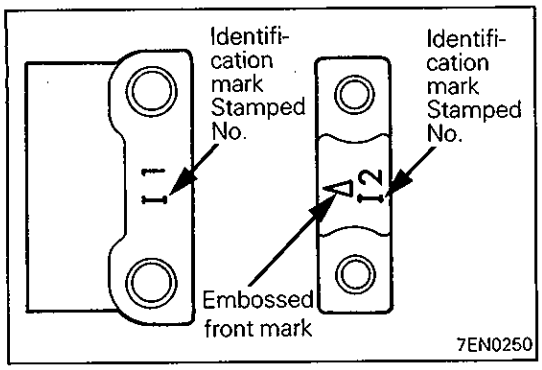

(5) Before installing a bearing cap, confirm its identification mark and number. The No.2, 3 and 4 bearing caps have a front mark. When installing the bearing caps, line up the front marks with those on the cylinder head.

Identification mark

I ..... **Intake**
E ..... **Exhaust**

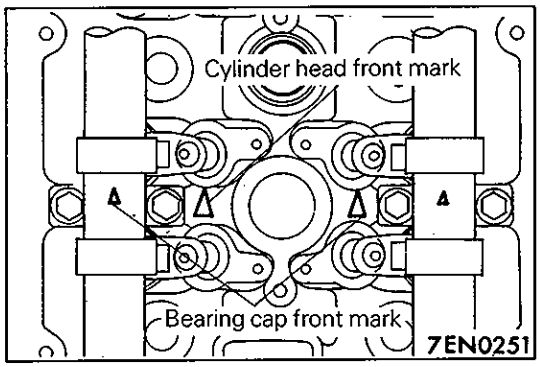

(6) Gradually tighten the bearing caps in two or three steps. In the final step, tighten to the specified torque.

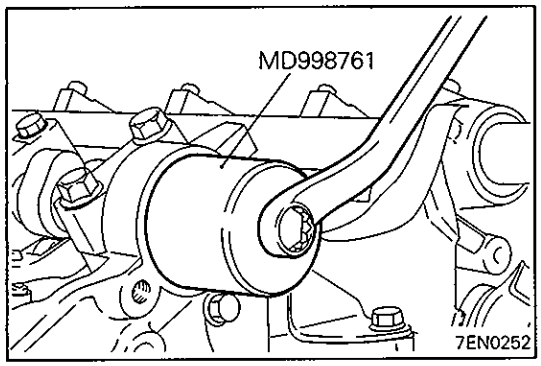

◆B◆ CAMSHAFT OIL SEAL

(1) Apply engine oil sparingly all around the lip of the camshaft oil seal.
(2) Using the special tool, install the oil seal.

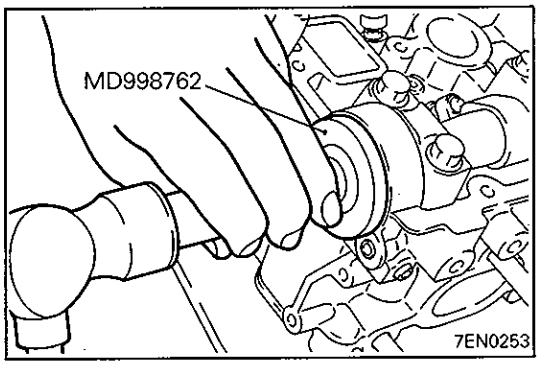

◆C◆ CIRCULAR PACKING

(1) Install the circular packing with the special tool.

© Mitsubishi Motors Corporation Dec. 1993

9a. ROCKER ARMS, CAMSHAFTS (GDI)

REMOVAL AND INSTALLATION

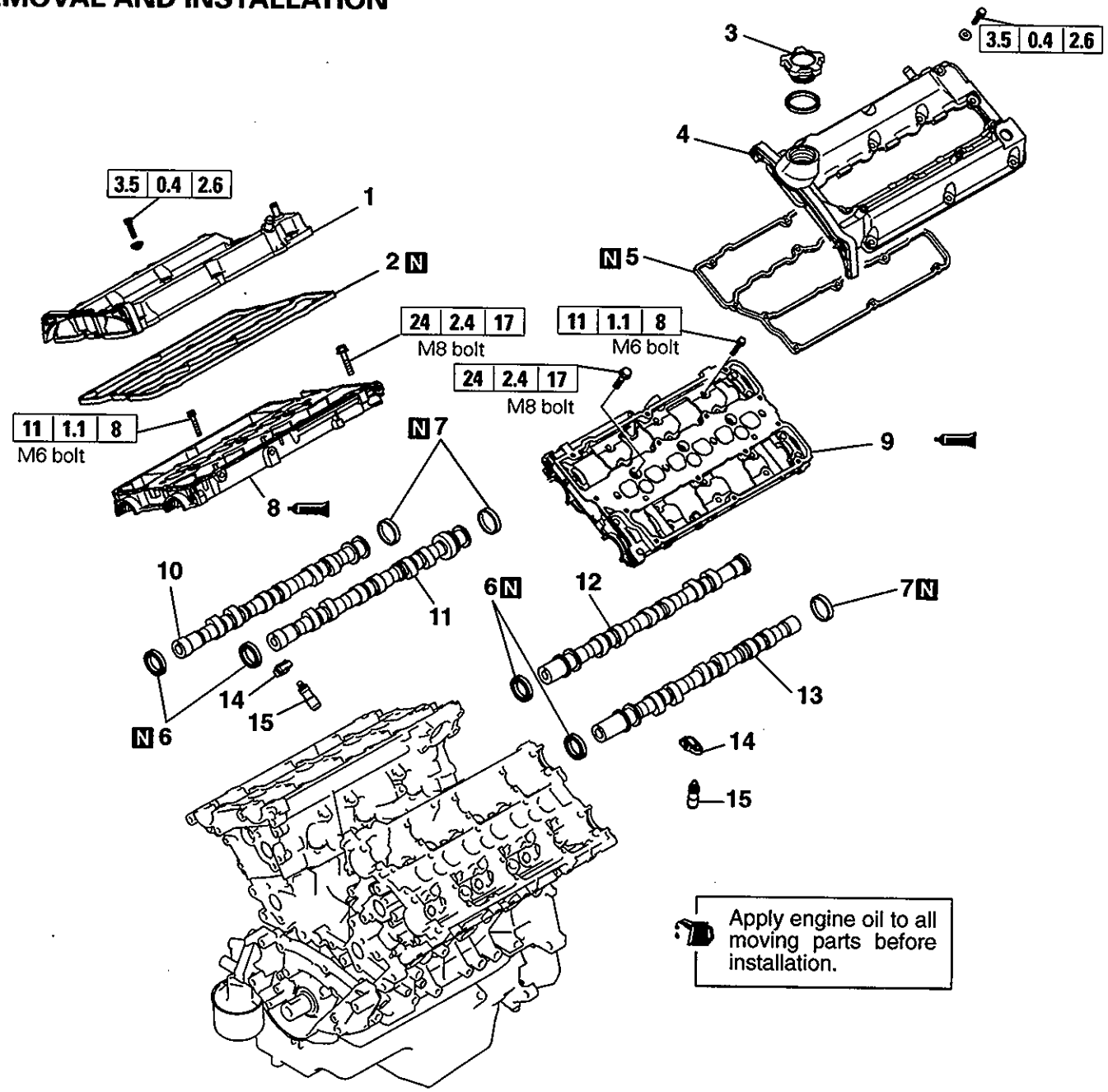

Removal steps

1. Rocker cover, right
2. Rocker cover gasket
3. Oil filler cap
4. Rocker cover, left
5. Rocker cover gasket

◆D◆ 6. Oil seal
◆C◆ 7. Circular packing
◆B◆ 8. Beam camshaft cap, right
◆B◆ 9. Beam camshaft cap, left
10. Exhaust camshaft, right
11. Intake camshaft, right
12. Intake camshaft, left
13. Exhaust camshaft, left
14. Rocker arm
◇A◇ ◆A◆ 15. Lash adjuster

© Mitsubishi Motors Corporation Mar. 2000

SERVICE POINT OF REMOVAL

◇A◇ REMOVAL OF LASH ADJUSTER

Caution
- **If the lash adjuster is re-used, clean the lash adjuster. (Refer to 11A-9a-4.)**

SERVICE POINTS OF INSTALLATION

◆A◆ INSTALLATION OF LASH ADJUSTER

Caution
- **If the lash adjuster is re-used, clean the lash adjuster. (Refer to 11A-9a-4.)**

(1) Fit the lash adjuster onto the rocker arm without allowing diesel fuel to spill out.

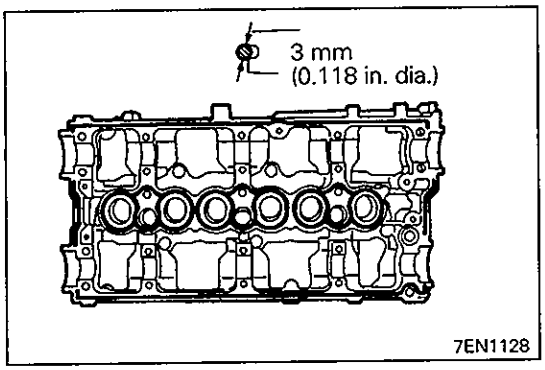

◆B◆ INSTALLATION OF BEAM CAMSHAFT CAP, LEFT / BEAM CAMSHAFT CAP, RIGHT

(1) Remove deposits from the surfaces of the beam camshaft caps and cylinder head, to which sealant is to be applied.
(2) Squeeze a 3-mm-thick (0.118-in.-thick) bead of sealant from the tube out into the groove in the bottom surface of the beam camshaft caps. Fit the caps before the sealant hardens.

Specified sealant:
MITSUBISHI GENUINE Part No. MD970389 or equivalent

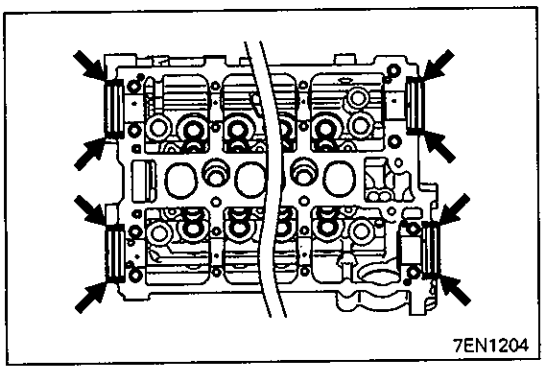

(3) Apply an adequate amount of sealant to the top surface of the cylinder head. Mount the beam bearing caps before the sealant hardens.

Specified sealant:
MITSUBISHI GENUINE Part No. MD970389 or equivalent

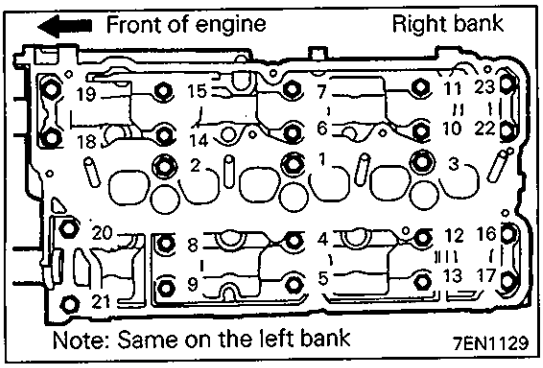

(4) Mount the beam camshaft caps and tighten them in the order shown to the specified torque.

Specified torque:
11 Nm (1.1 kgm, 8 ft.lbs) ..... M6 bolt
24 Nm (2.4 kgm, 17 ft.lbs) ..... M8 bolt

(5) After the caps have been tightened, wipe the portion of the sealant that is squeezed out at the intake port before it hardens.

© Mitsubishi Motors Corporation Mar. 2000

Added

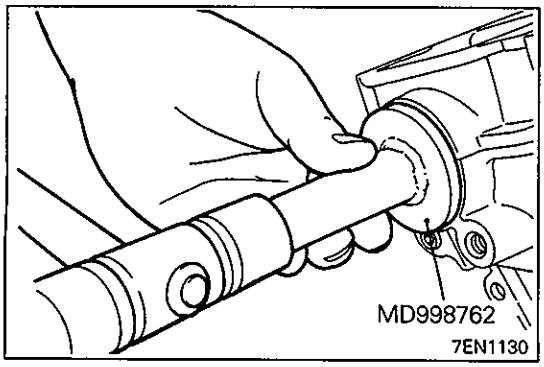

◆C◆ INSTALLATION OF CIRCULAR PACKING

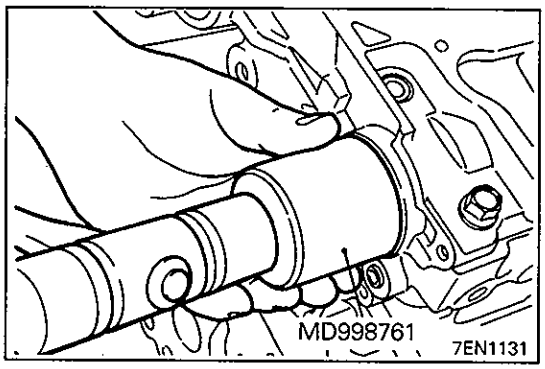

◆D◆ INSTALLATION OF OIL SEAL

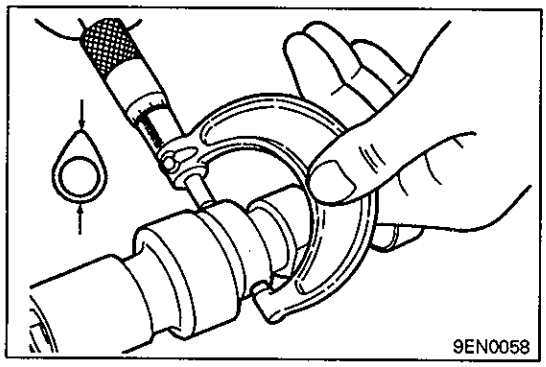

INSPECTION

CAMSHAFT

(1) Measure the cam height.

Standard value:

35.20 mm (1.386 in.)	**Intake**
34.91 mm (1.374 in.)	**Exhaust**

Limit:

34.70 mm (1.366 in.)	**Intake**
34.41 mm (1.355 in.)	**Exhaust**

LASH ADJUSTER

Caution

- **The lash adjusters are precision-engineered mechanisms. Do not allow them to become contaminated by dirt or other foreign substances.**
- **Do not attempt to disassemble the lash adjusters.**
- **Use only fresh diesel fuel to clean the lash adjusters.**

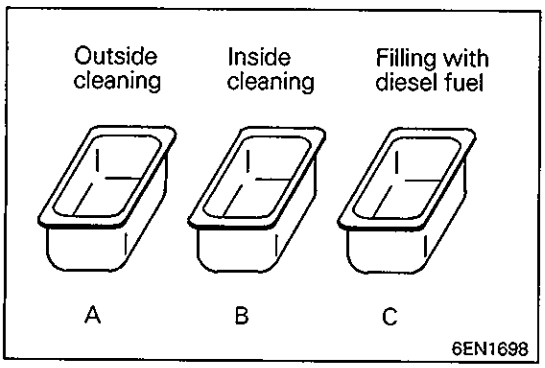

(1) Prepare three containers and approximately five liters of diesel fuel. Into each container, pour enough diesel fuel to completely cover a lash adjuster when it is standing upright. Then, perform the following steps with each lash adjuster.

© Mitsubishi Motors Corporation Mar. 2000

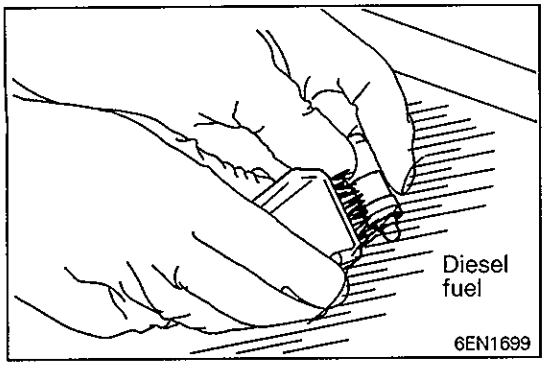

(2) Place the lash adjuster in container A and clean its outside surface.

NOTE
Use a nylon brush if deposits are hard to remove.

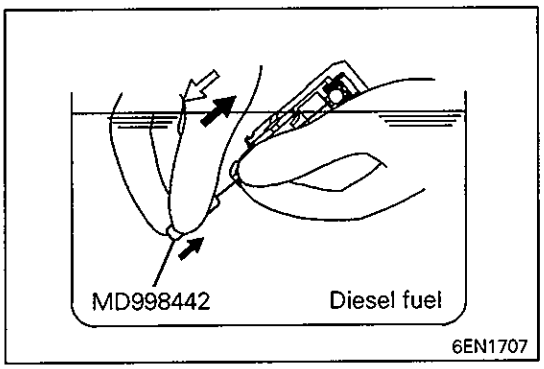

(3) While gently pushing down the internal steel ball using special tool MD998442, move the plunger through 5 to 10 strokes until it slides smoothly. In addition to eliminating stiffness in the plunger, this operation will remove dirty oil.

Caution
- **The steel ball spring is extremely weak, so the lash adjuster's functionality may be lost if the air bleed wire is pushed in hard.**

NOTE
If the plunger remains stiff or the mechanism appears otherwise abnormal, replace the lash adjuster.

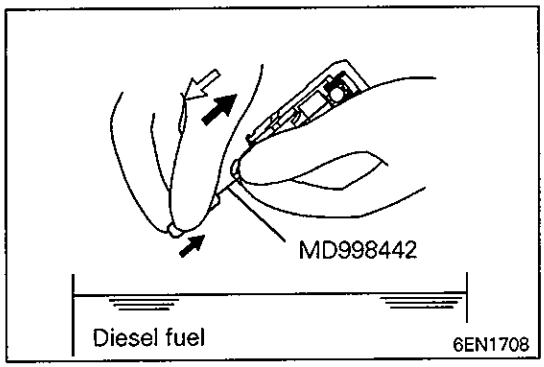

(4) Removal the lash adjuster from the container. Then, push down the steel ball gently and push the plunger to eliminate diesel fuel from the pressure chamber.

Caution
- **Make sure the oil hole in the side of the body is pointing toward container A. Do not point the oil hole at yourself or other people.**

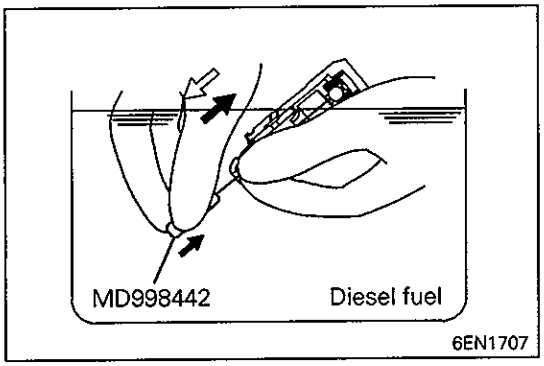

(5) Place the lash adjuster in container B. Then, gently push down the internal steel ball using special tool MD998442 and move the plunger through 5 to 10 strokes until it slides smoothly. This operation will clean the lash adjuster's pressure chamber.

Caution
- **The steel ball spring is extremely weak, so the lash adjuster's functionality may be lost if the air bleed wire is pushed in hard.**

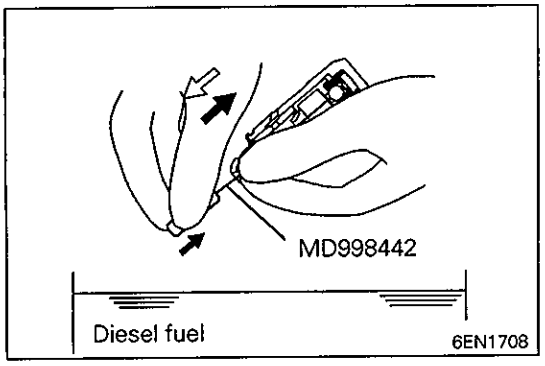

(6) Remove the lash adjuster from the container. Then, push down the steel ball gently and push the plunger to eliminate diesel fuel from the pressure chamber.

Caution
- **Make sure the oil hole in the side of the body is pointing toward container A. Do not point the oil hole at yourself or other people.**

© Mitsubishi Motors Corporation Mar. 2000

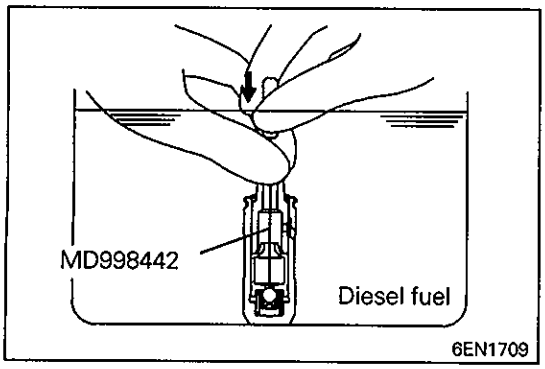

(7) Place the lash adjuster in container C. Then, gently push down the internal steel ball using special tool MD998442.

Caution

- **Do not use container C for cleaning. If cleaning is performed in container C, foreign matter could enter the pressure chamber when chamber is filled with diesel fuel.**

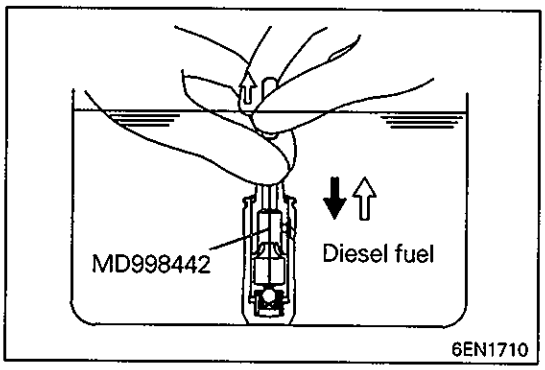

(8) Stand the lash adjuster with its plunger at the top, then push the plunger downward firmly until it moves through its greatest possible stroke. Return the plunger slowly, then release the steel ball and allow the pressure chamber to fill with diesel fuel.

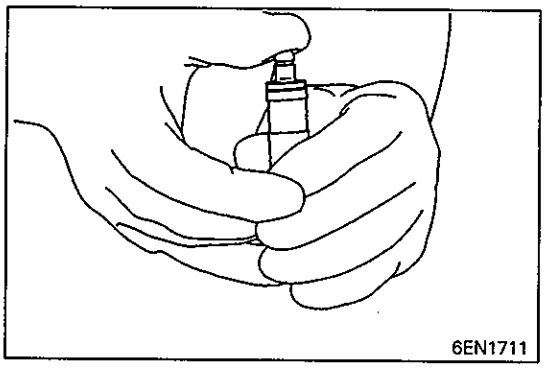

(9) Remove the lash adjuster from the container, then stand the lash adjuster with its plunger at the top. Push the plunger firmly and check that it does not move. Also, check that the lash adjuster's height matches that of a new lash adjuster.

NOTE
If lash adjuster contracts, perform the operations (7) through (9) again to fill it with diesel fuel completely. Replace the lash adjuster if it still contracts after performing these steps.

(10) Stand the lash adjuster upright to prevent diesel fuel from spilling out. Do not allow the lash adjuster to become contaminated by dirt or other foreign matter. Fit the lash adjuster onto the engine as soon as possible.

© Mitsubishi Motors Corporation Mar. 2000

10. ROCKER ARMS AND ROCKER SHAFTS (TWO-CAMSHAFT 12-VALVE ENGINE)

DISASSEMBLY AND REASSEMBLY

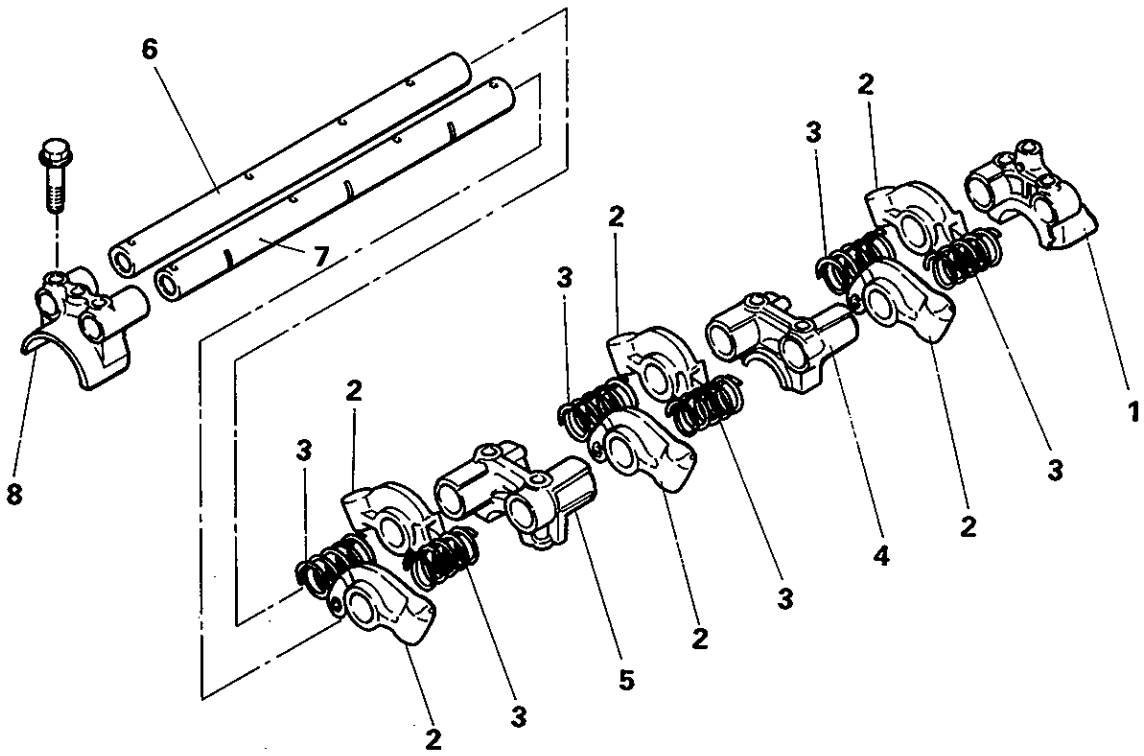

Disassembly steps

1. Bearing cap No. 4
◇A◇ 2. Rocker arm
3. Spring
4. Bearing cap No. 3
5. Bearing cap No. 2
◆A◆ 6. Rocker arm shaft "B"
◆A◆ 7. Rocker arm shaft "A"
8. Bearing cap No. 1

For disassembly and reassembly of the rocker arms and rocker arm shafts for 24-valve engine, refer to page 11A-8-3.

7EN0078

SERVICE POINT OF DISASSEMBLY

◇A◇ DISASSEMBLY OF ROCKER ARMS

(1) Before disassembly, identify the original location of each rocker arm by a symbol.
For example, put symbols as shown below.
1IN: For No.1 cylinder intake
6EX: For No.6 cylinder exhaust

© Mitsubishi Motors Corporation Aug. 1994

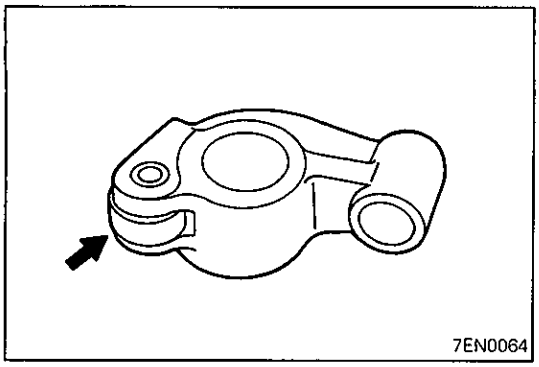

INSPECTION

ROCKER ARM

(1) Check the roller surface and replace the rocker arm if recesses, damage or heat seizure is observed.
(2) Check roller rotation and replace the rocker arm if uneven rotation or roller backlash is observed.
(3) Check the inside diameter and replace the rocker arm if damage or seizure is observed.

ROCKER ARM SHAFT

(1) Check rocker arm mounting portions of rocker arm shaft for wear or damage. Replace as necessary.
(2) Check to ensure that oil holes are clear.

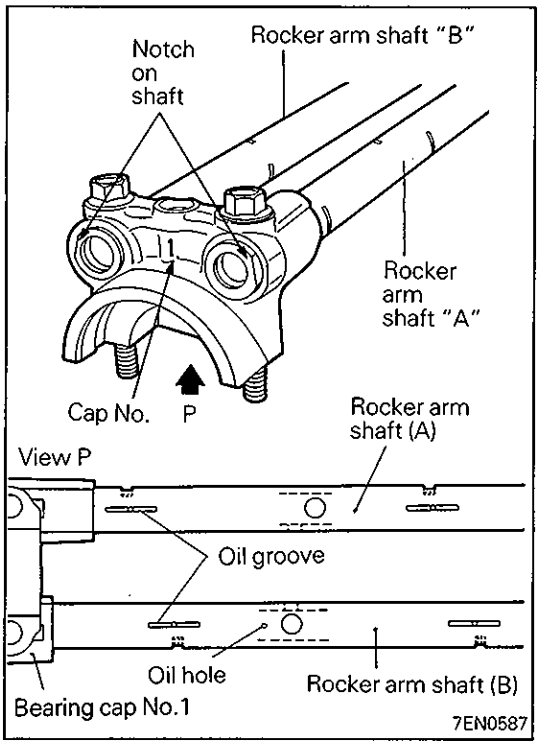

SERVICE POINT OF REASSEMBLY

◆A◆ REASSEMBLY OF ROCKER ARM SHAFTS

(1) Install the rocker arm shafts "A" and "B" to the camshaft bearing cap No. 1 and insert the bolts into the holes of bearing cap and shafts.
(2) Install rocker arm shafts with the notched side facing the bearing cap No. 1 and the oil grooved side facing downward. The shaft with a smaller oil hole is the rocker arm shaft "A".

© Mitsubishi Motors Corporation Sept. 1992

(3) Install the rocker arms, springs and camshaft bearing caps as illustrated. The rocker arms are all equally shaped. Assemble the rocker arms according to the symbols put before disassembly. The bearing caps are also equally shaped. Assemble the caps according to identification marks as to right and left banks put before disassembly.

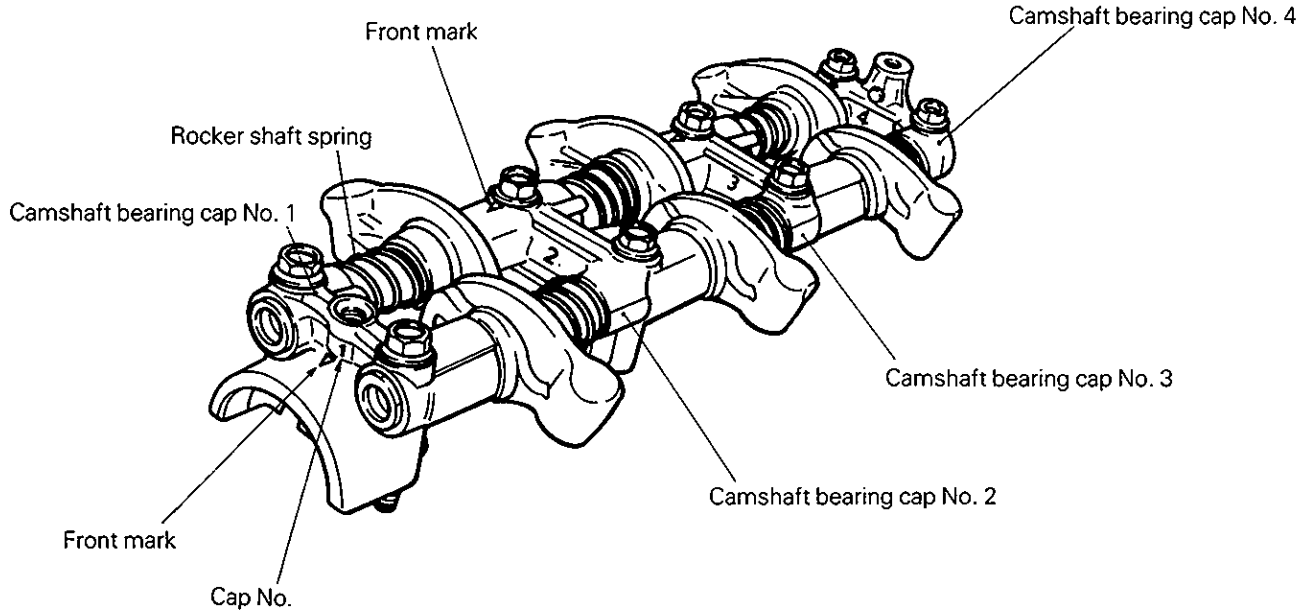

© Mitsubishi Motors Corporation Oct. 1990

NOTES

11. CYLINDER HEAD AND VALVE (TWO-CAMSHAFT ENGINE)

REMOVAL AND INSTALLATION

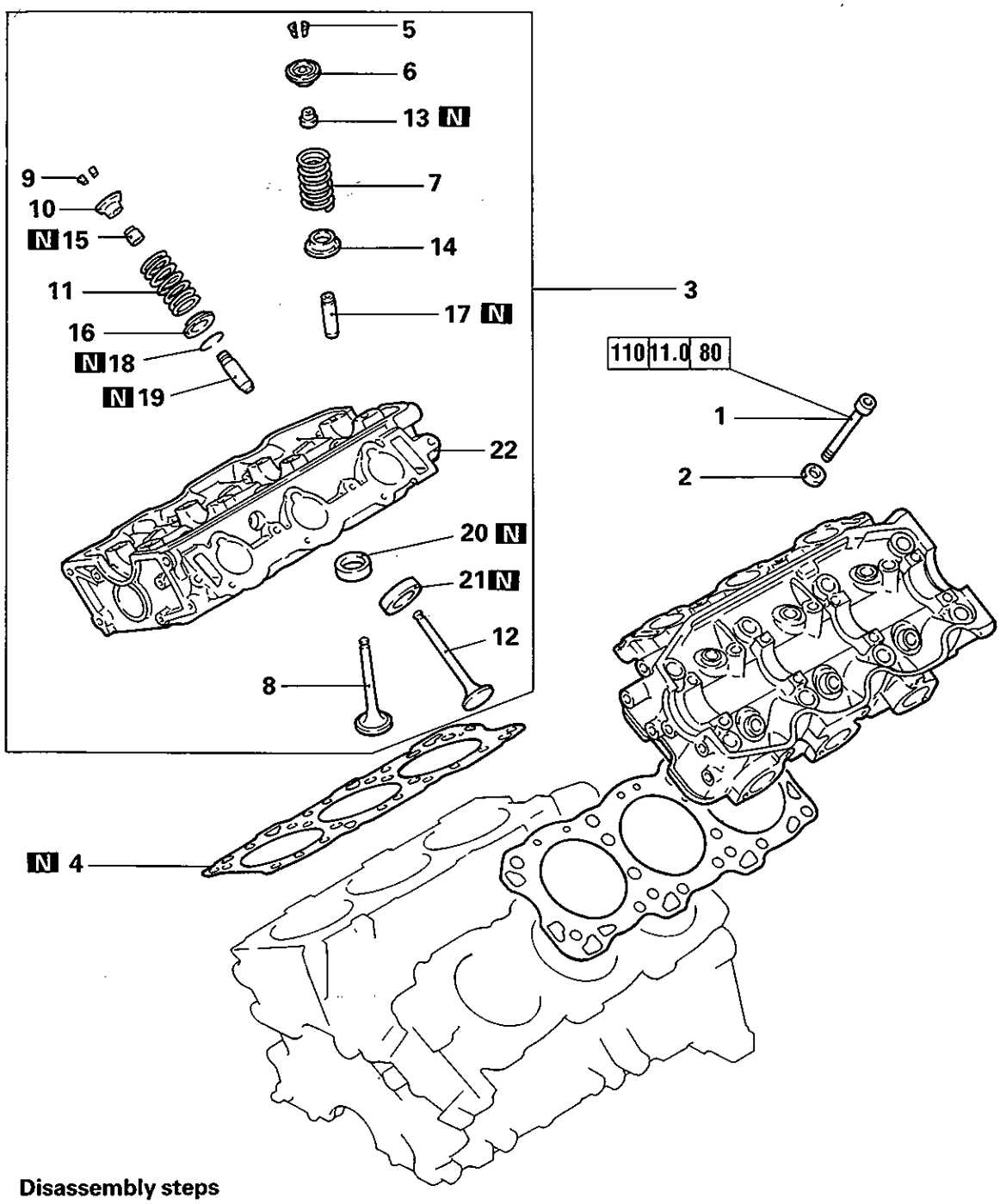

Disassembly steps

◊A◊ ◆D◆ 1. Cylinder head bolt
2. Washer
3. Cylinder head assembly
◆C◆ 4. Cylinder head gasket
◊C◊ ◆E◆ 5. Retainer lock
6. Valve spring retainer
◆B◆ 7. Valve spring
8. Inlet valve
◊C◊ ◆E◆ 9. Retainer lock
10. Valve spring retainer
◆B◆ 11. Valve spring
12. Exhaust valve
◊B◊ ◆A◆ 13. Valve stem seal
14. Valve spring seat
◊B◊ ◆A◆ 15. Valve stem seal
16. Valve spring seat
17. Inlet valve guide
18. Snap ring
19. Exhaust valve guide
20. Inlet valve seat
21. Exhaust valve seat
22. Cylinder head

7EN0522

© Mitsubishi Motors Corporation Sept. 1992

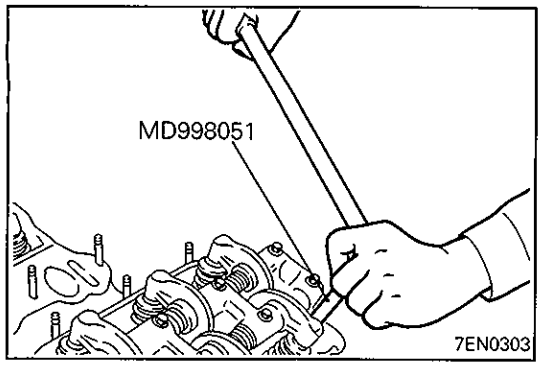

SERVICE POINTS OF REMOVAL

PRECAUTION FOR REMOVED PARTS

(1) Keep removed parts in order according to the cylinder number and intake/exhaust.

⟨A⟩ REMOVAL OF CYLINDER HEAD BOLT

(1) Using the special tool, loosen the cylinder head bolts. Loosen evenly, little by little.

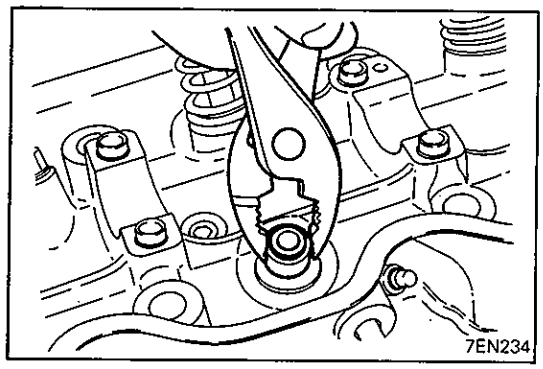

⟨B⟩ REMOVAL OF VALVE STEM SEAL

(1) Remove the valve stem seals with pliers and discard them. Do not reuse the stem seals.

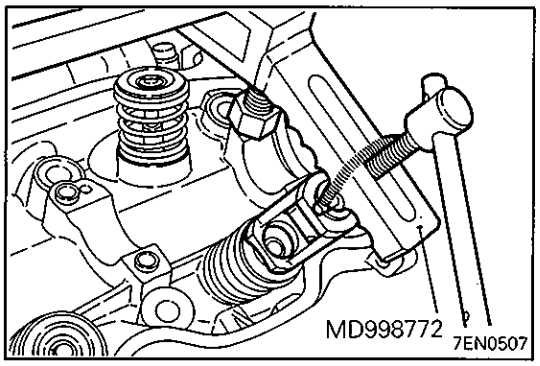

⟨C⟩ REMOVAL OF RETAINER LOCK

(1) Using the special tool, compress the spring.
(2) Remove the retainer locks.

INSPECTION

CYLINDER HEAD

(1) Check the cylinder head, before cleaning, for water leaks, gas leaks, damage, and cracks.
(2) Remove oil, scale, sealing compound, and carbon deposits completely. After cleaning oil passages, apply compressed air to ensure that the passages are not clogged.
(3) Check the cylinder head gasket surface for flatness by using a straightedge in the directions of A through G shown in illustration.

Standard value:
12-valve engine: 0.05 mm (0.0020 in.)
24-valve engine: 0.03 mm (0.0011 in.)
Limit: 0.2 mm (0.008 in.)

(4) If the service limit is exceeded, correct to meet specification.

Grinding limit: 0.2 mm (0.008 in.)

Caution
- **The total thickness of the stock allowed to be removed from cylinder head and mating cylinder block is 0.2 mm (0.008 in.) in thickness.**

Overall height:
12-valve engine: 84 mm (3.31 in.)
24-valve engine: 120 mm (4.49 in.)

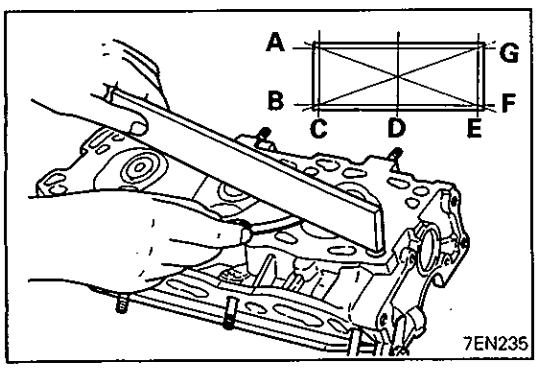

© Mitsubishi Motors Corporation Aug. 1994

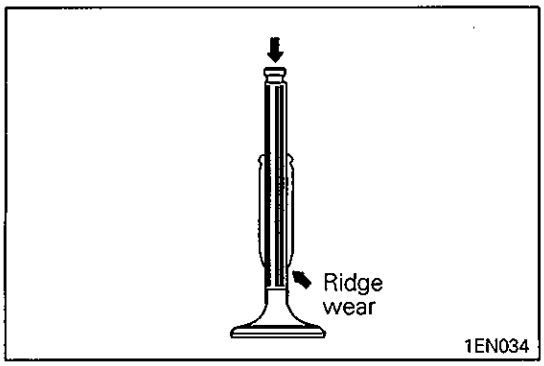

VALVE

(1) If the valve stem is worn (ridge wear) or otherwise damaged, replace. Also replace the valve if the stem end (that contacts to the rocker arm adjusting screw) has a dent.

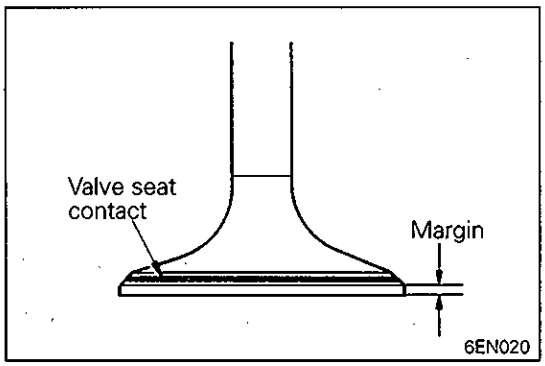

(2) Check the valve face for correct contact. If incorrect, reface using valve refacer. Valve seat contact should be maintaining uniform at the center of valve face.

(3) If the margin exceeds the service limit, replace the valve.

Standard value:

12-valve engine

1.2 mm (0.047 in.) ..... Intake

2.0 mm (0.079 in.) ..... Exhaust

24-valve engine

1.0 mm (0.037 in.) ..... Intake

1.2 mm (0.047 in.) ..... Exhaust

Limit:

12-valve engine

0.7 mm (0.028 in.) ..... Intake

1.7 mm (0.059 in.) ..... Exhaust

24-valve engine

1.0 mm (0.039 in.) ..... Intake

1.2 mm (0.047 in.) ..... Exhaust

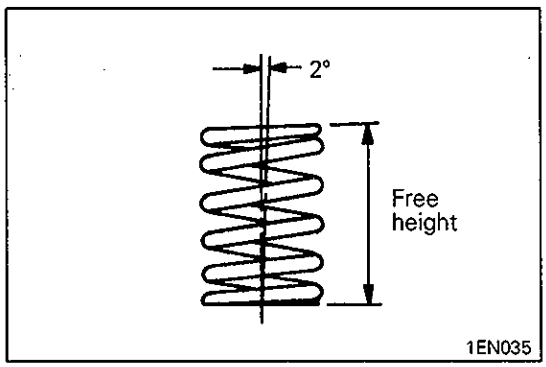

(4) Measure the overall length of the valve. If the specified limit is exceeded, replace the valve.

Standard value:

12-valve engine

102.97 mm (4.0539 in.) ..... Intake

102.67 mm (4.0421 in.) ..... Exhaust

24-valve engine

112.30 mm (4.4213 in.) ..... Intake

114.11 mm (4.4925 in.) ..... Exhaust

Limit:

12-valve engine

102.47 mm (4.0342 in.) ..... Intake

102.17 mm (4.0224 in.) ..... Exhaust

24-valve engine

111.80 mm (4.4016 in.) ..... Intake

113.61 mm (4.4728 in.) ..... Exhaust

VALVE SPRINGS

(1) Measure the free height of spring and, if it is smaller than the limit, replace.

Standard value:

12-valve engine

49.8 mm (1.961 in.)

24-valve engine

51.0 mm (2.008 in.)

© Mitsubishi Motors Corporation Nov. 1995

Limit:
12-valve engine
48.8 mm (1.921 in.)
24-valve engine
50.0 mm (1.969 in.)

(2) Measure the squareness of the spring and, if the limit is exceeded, replace.

Standard value: 2°

Limit: 4°

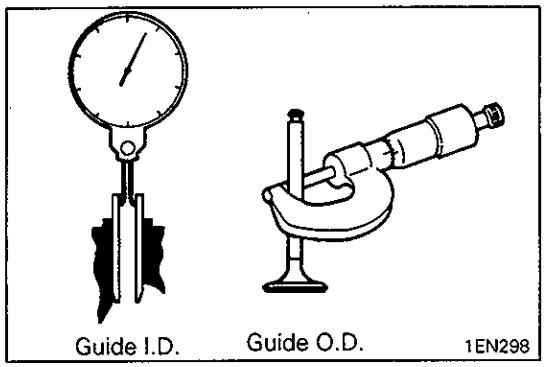

VALVE GUIDES

(1) Measure the clearance between the valve guide and valve stem. If the limit is exceeded, replace the valve guide or valve, or both.

Standard value:
12-valve engine
0.02 – 0.06 mm (0.0008 – 0.0024 in.) ..... Intake
0.05 – 0.09 mm (0.0020 – 0.0035 in.) ... Exhaust
24-valve engine
0.02 – 0.05 mm (0.0008 – 0.0020 in.) ..... Intake
0.04 – 0.07 mm (0.0016 – 0.0028 in.) ... Exhaust

Limit
0.10 mm (0.0039 in.) ..... Intake
0.15 mm (0.0059 in.) ..... Exhaust

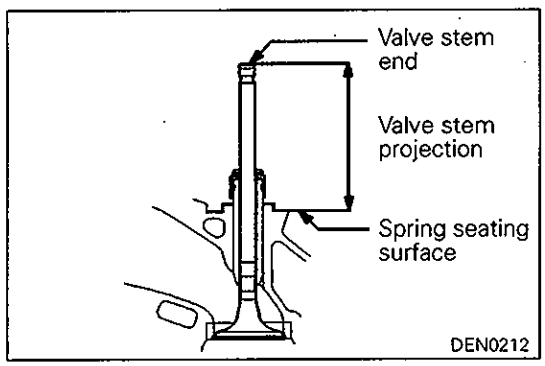

VALVE SEAT

(1) Assemble the valve, then measure the valve stem projection between the end of the valve stem and the spring seating surface. If the measurement exceeds the specified limit, replace the valve seat.

Standard value:
41.65 mm (1.6398 in.) ..... 12-valve engine
49.30 mm (1.9409 in.) ..... 24-valve engine

Limit:
42.15 mm (1.6594 in.) ..... 12-valve engine
49.80 mm (1.9606 in.) ..... 24-valve engine

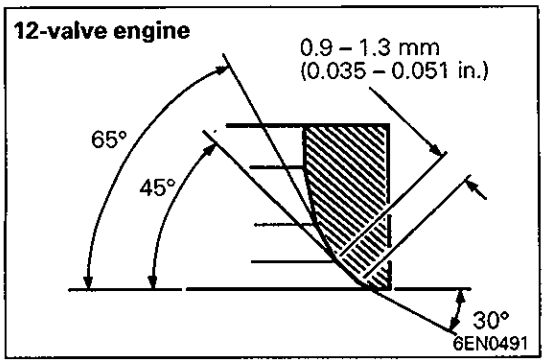

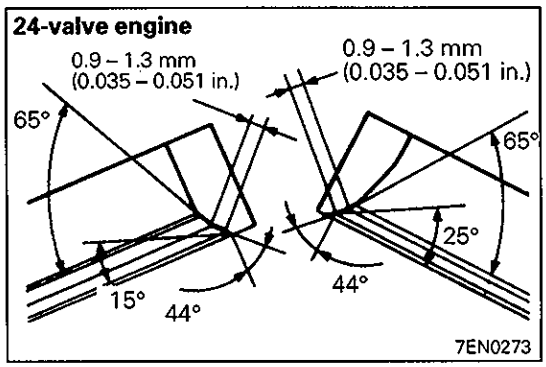

VALVE SEAT RECONDITIONING PROCEDURE

(1) Before correcting the valve seat, check for clearance between the valve guide and valve and, if necessary, replace the valve guide.
(2) Using the special tool or seat grinder, correct to obtain the specified seat width and angle.
(3) After correcting the valve seat, lap the valve and valve seat using lapping compound. Then, check the valve stem projection (refer to VALVE SEAT in INSPECTION).

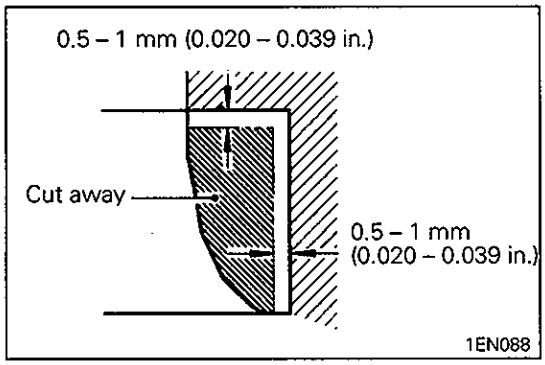

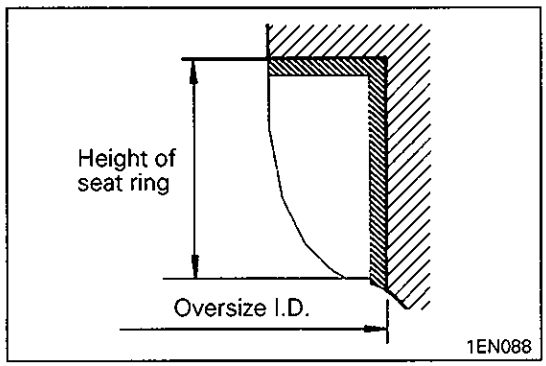

VALVE SEAT REPLACEMENT PROCEDURE

(1) Cut the valve seat to be replaced from the inside to thin the wall thickness. Then, remove the valve seat.
(2) Rebore the valve seat hole in cylinder head to a selected oversize valve seat diameter.

Intake valve seat hole diameter
12-valve engine
0.30 O.S.: 44.30 – 44.33 mm (1.7441 – 1.7453 in.)
0.60 O.S.: 44.60 – 44.63 mm (1.7559 – 1.7571 in.)
24-valve engine
0.30 O.S.: 34.30 – 34.33 mm (1.3503 – 1.3516 in.)
0.60 O.S.: 34.60 – 34.63 mm (1.3622 – 1.3634 in.)

Exhaust valve seat hole diameter
12-valve engine
0.30 O.S.: 38.30 – 38.33 mm (1.5079 – 1.5091 in.)
0.60 O.S.: 38.60 – 38.63 mm (1.5197 – 1.5209 in.)
24-valve engine
0.30 O.S.: 31.80 – 31.83 mm (1.2520 – 1.2531 in.)
0.60 O.S.: 32.10 – 32.13 mm (1.2638 – 1.2650 in.)

(3) Before fitting the valve seat, either heat the cylinder head up to approximately 250°C (482°F) or cool the valve seat in liquid nitrogen, to prevent the cylinder head bore from galling.
(4) Using valve seat cutter, correct the valve seat to the specified width and angle.
See "VALVE SEAT RECONDITIONING PROCEDURE".

© Mitsubishi Motors Corporation Nov. 1995

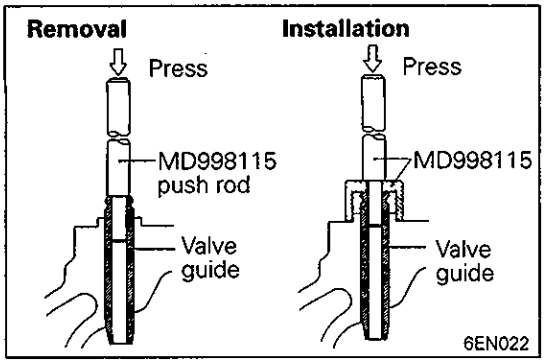

VALVE GUIDE REPLACEMENT PROCEDURE

(12-valve engine)

(1) Remove the snap ring from the exhaust valve guide.
(2) Using the special tool and a press, remove the valve guide toward cylinder head gasket surface.
(3) Rebore valve guide hole to the new oversize valve guide outside diameter.

Valve guide hole diameter
0.05 O.S.: 13.05 – 13.07 mm (0.5138 – 0.5145 in.)
0.25 O.S.: 13.25 – 13.27 mm (0.5217 – 0.5224 in.)
0.50 O.S.: 13.50 – 13.52 mm (0.5315 – 0.5323 in.)

NOTE
Do not install a valve guide of the same size again.

(4) Using the special tool, press-fit the valve guide, working from the cylinder head top surface.
(5) After installing valve guides, insert new valves in them to check for sliding condition.
(6) When valve guides have been replace, check for valve contact and correct valve seats as necessary.

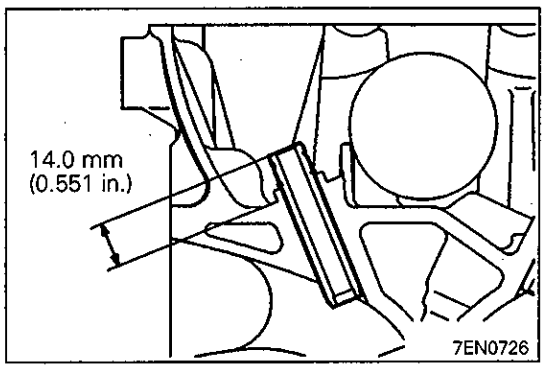

(24-valve engine)

(1) Remove the snap ring from the exhaust valve guide.
(2) Using the press, remove the valve guide toward the cylinder block.
(3) Rebore the valve guide hole of the cylinder head so that it may fit to the press-fitted oversize valve guide.

Caution
- **Do not install a valve guide of the same size again.**

Valve guide hole diameter
0.05 O.S.: 11.05 – 11.07 mm (0.4350 – 0.4358 in.)
0.25 O.S.: 11.25 – 11.27 mm (0.4429 – 0.4437 in.)
0.50 O.S.: 11.50 – 11.52 mm (0.4528 – 0.4535 in.)

(4) Press-fit the valve guide until it protrude 14.0 mm (0.551 in.) from the cylinder head top surface as shown in the illustration.

NOTE
(1) When press-fitting the valve guide, work from the cylinder head top surface.
(2) Pay attention to the difference in length of the valve guides. [intake side: 45.5 mm (1.79 in.); exhaust side: 50.5 mm (1.99 in.)]
(3) After installing the valve guides, insert new valves in them to check for sliding condition.

© Mitsubishi Motors Corporation Nov. 1995

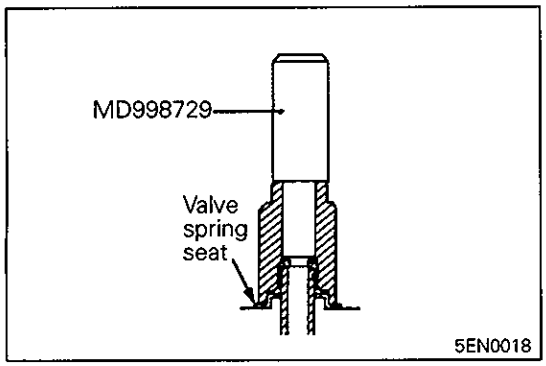

SERVICE POINTS OF INSTALLATION

◗A◖ INSTALLATION OF VALVE STEM SEAL

(12-valve engine)

(1) Install the valve spring seat.

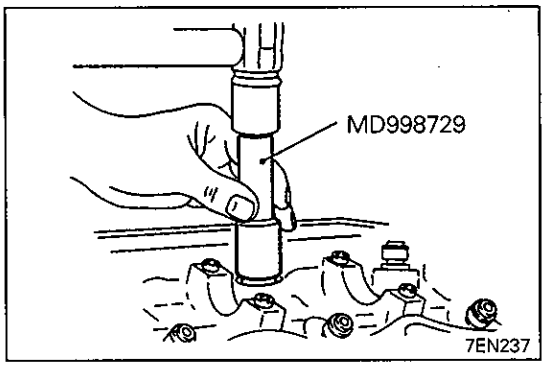

(2) Using the special tool, install a new stem seal to the valve guide.

Caution

- **Do not reuse the valve stem seal.**

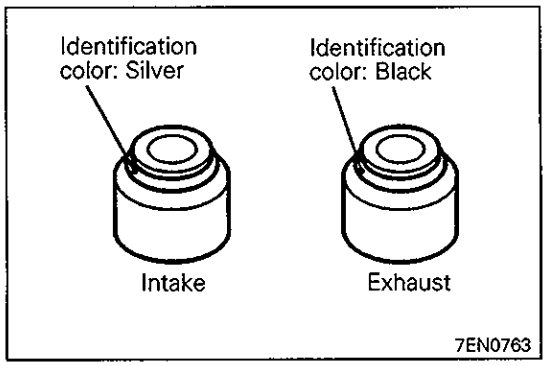

(24-valve engine)

(1) Install the valve spring seal.
(2) Using the special tool, install new stem seals into the valve guides.

NOTE
Be sure not to confuse the intake and exhaust valve stem seals.

Valve stem seal identification color
Intake: Silver
Exhaust: Black

Caution

- **Do not reuse the valve stem seal.**
- **Be sure to use the special tool to install the valve stem seal. Incorrect installation may result in the oil leaks.**

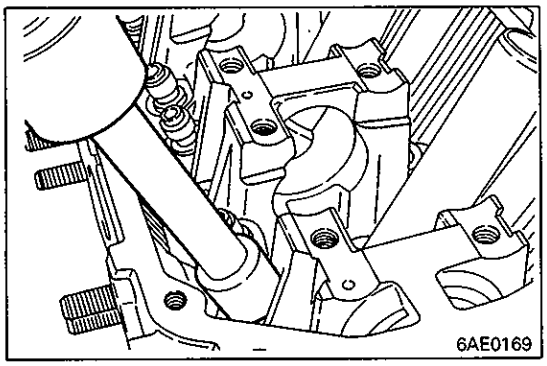

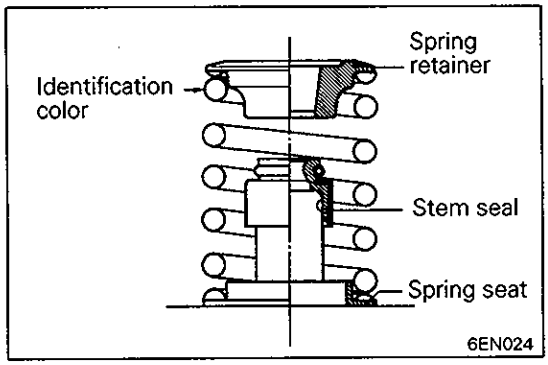

◗B◖ INSTALLATION OF VALVE SPRINGS

(1) Direct the valve spring end with identification color end toward the spring retainer.

© Mitsubishi Motors Corporation Nov. 1995

◆C◆ INSTALLATION OF CYLINDER HEAD GASKET

Caution

- **Do not apply sealant to cylinder head gasket.**

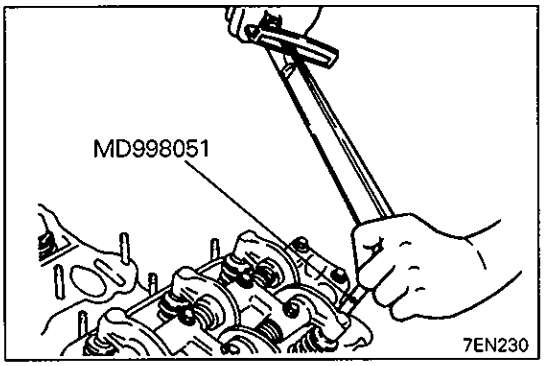

◆D◆ INSTALLATION OF CYLINDER HEAD BOLT

(1) Tighten the cylinder head bolts in the sequence shown. Each bolt should be tightened in two to three steps, torquing progressively. Tighten to specified torque in the final sequence.

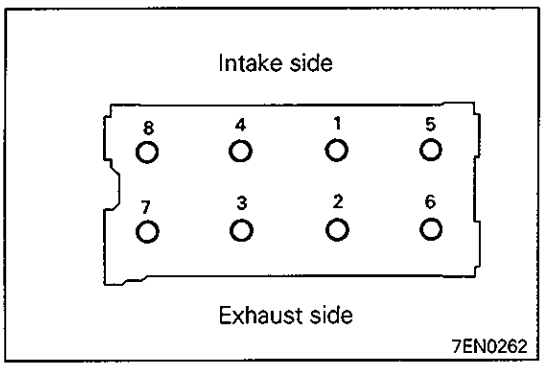

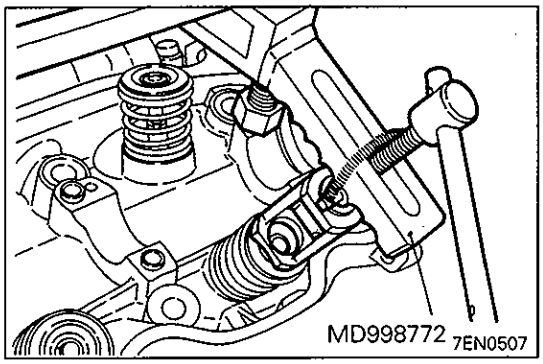

◆E◆ INSTALLATION OF RETAINER LOCK

(1) Using the special toll, compress the valve spring and insert the retainer lock into position.

12. CYLINDER HEAD AND VALVES (FOUR-CAMSHAFT ENGINE)

REMOVAL OF INSTALLATION

(Except GDI)

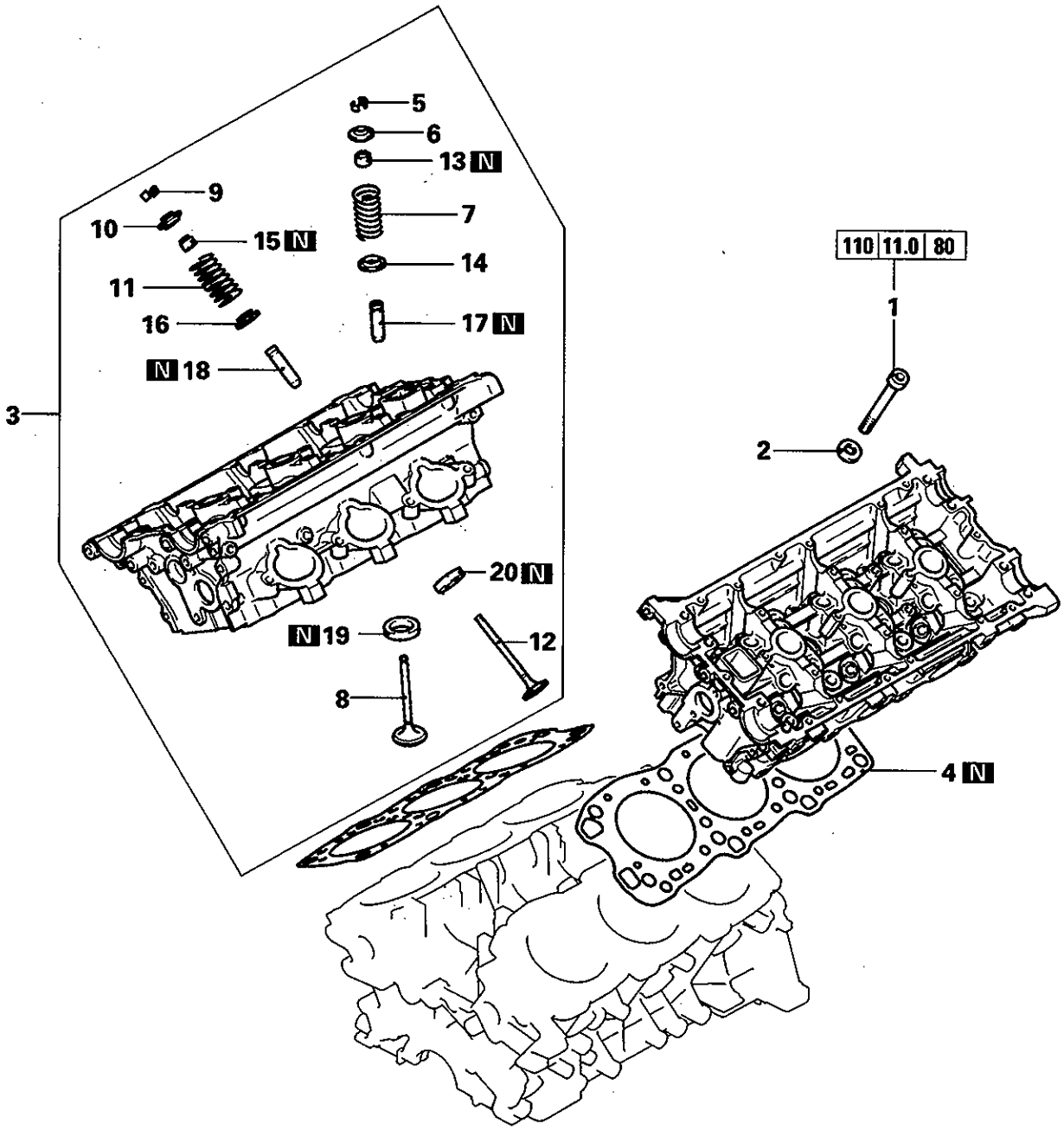

Removal steps

◇A◇ ◆E◆ 1. Cylinder head bolt
2. Washer
3. Cylinder head assembly
◆D◆ 4. Cylinder head gasket
◇B◇ ◆C◆ 5. Retainer rock
6. Valve spring retainer
◆B◆ 7. Valve spring
8. Intake valve
◇B◇ ◆C◆ 9. Retainer rock
10. Valve spring retainer
◆B◆ 11. Valve spring
◇C◇ 12. Exhaust valve
◆A◆ 13. Valve stem seal
14. Valve spring seat
◆A◆ 15. Valve stem seal
16. Valve spring seat
17. Intake valve guide
18. Exhaust valve guide
19. Intake valve seat
20. Exhaust valve seat

7EN0254

© Mitsubishi Motors Corporation Mar. 2000

REMOVAL AND INSTALLATION

(GDI)

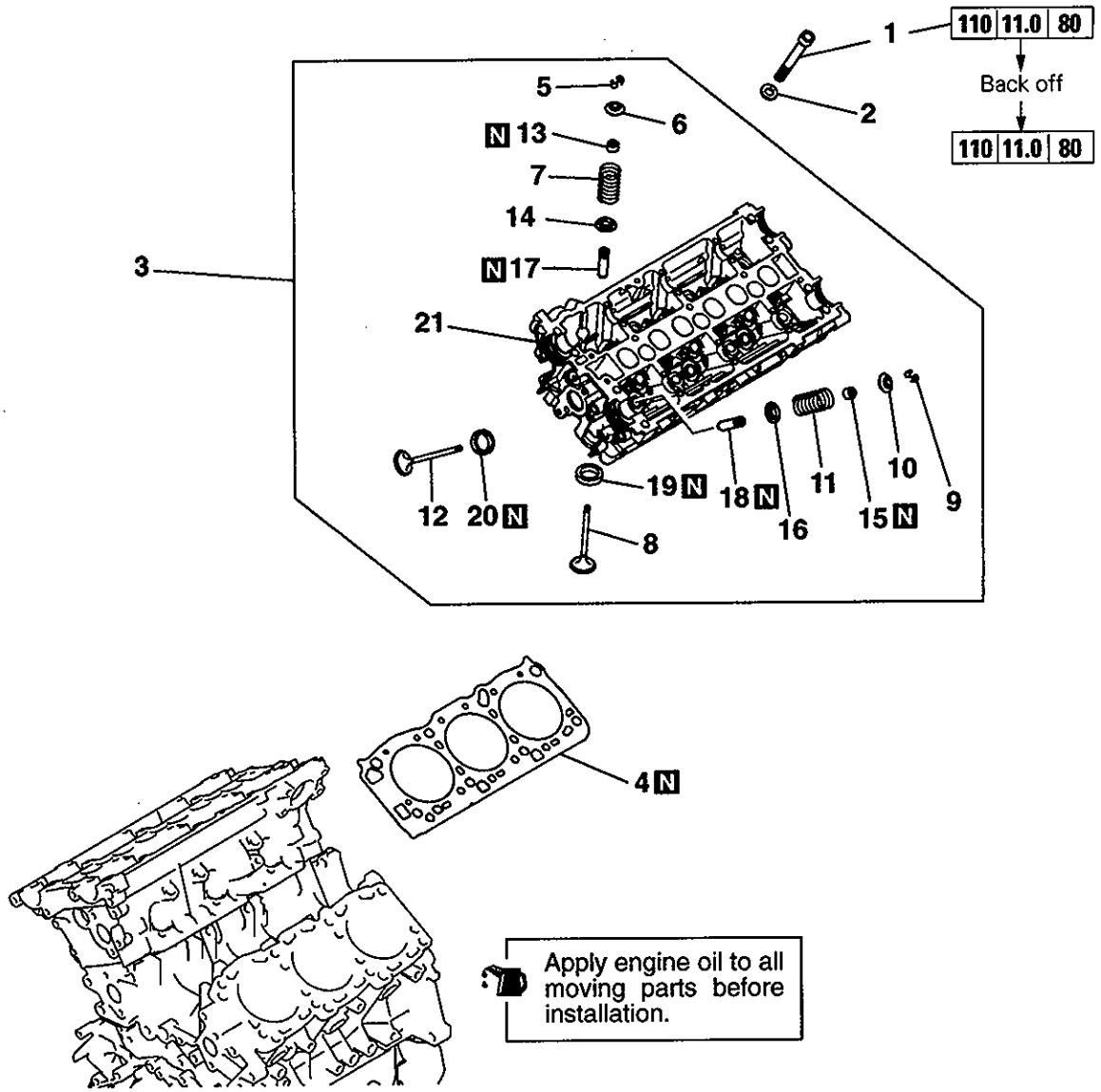

Removal steps

- ◇A◇ ◆F◆ 1. Cylinder head bolt
- 2. Washer
- 3. Cylinder head assembly
- ◆D◆ 4. Cylinder head gasket
- ◇B◇ ◆C◆ 5. Retainer lock
- 6. Valve spring retainer
- ◆B◆ 7. Valve spring
- 8. Intake valve
- ◇B◇ ◆C◆ 9. Retainer lock
- 10. Valve spring retainer
- ◆B◆ 11. Valve spring
- 12. Exhaust valve
- ◆A◆ 13. Valve stem seal
- 14. Valve spring seat
- ◆A◆ 15. Valve stem seal
- 16. Valve spring seat
- 17. Intake valve guide
- 18. Exhaust valve guide
- 19. Intake valve seat
- 20. Exhaust valve seat
- 21. Cylinder head

7EN1132

© Mitsubishi Motors Corporation Mar. 2000

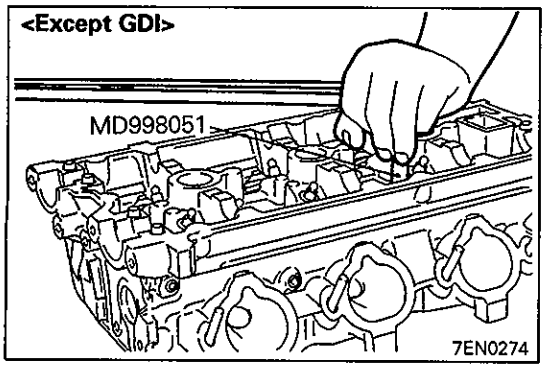

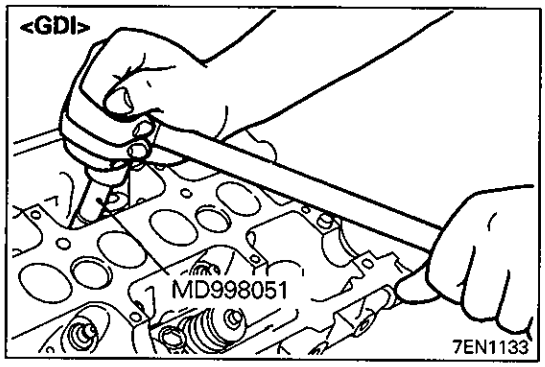

SERVICE POINTS OF REMOVAL

PRECAUTION FOR REMOVED PARTS

(1) Keep removed parts in order according to the cylinder number and intake/exhaust.

◊A◊ REMOVAL OF CYLINDER HEAD BOLTS

(1) Using the special tool, loosen the cylinder head bolts. Loosen evenly, little by little.

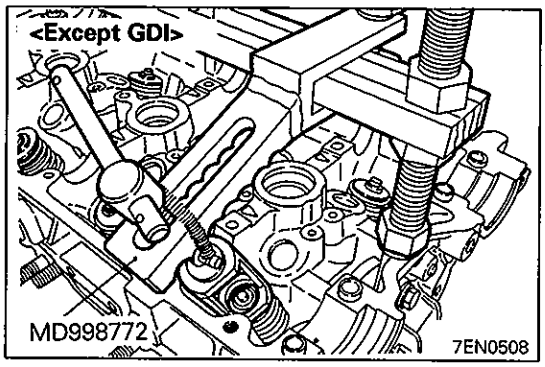

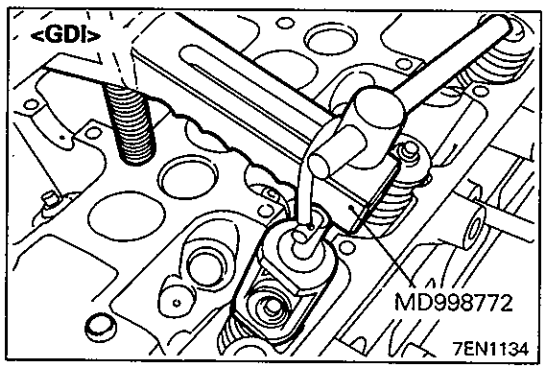

◊B◊ REMOVAL OF RETAINER LOCKS

(1) Using the special tool, compress the spring.
(2) Remove the retainer locks.

◊C◊ EXHAUST VALVE HANDLING PRECAUTIONS – 3000GT FOR EUROPE

(1) Sodium reacts violently with water or moisture generation heat and liberating hydrogen. It must be handled with utmost care because otherwise the following dangerous conditions may result:
Loss of eyesight if sodium gets in eyes.
Burns if sodium contact skin.
Fire hazard.

© Mitsubishi Motors Corporation Mar. 2000

(2) Handling of Sodium-filled Exhaust Valves
Sodium-filled exhaust valves are not dangerous and may be handled in the same way as ordinary valves unless they are broken.
Never try to break the valves and expose sodium to the air.
When worn exhaust valves are to be discarded, have them disposed of by a salvage company equipped with special disposal system, notifying them that the valves contain sodium.
Should the exhaust valves be broken, neutralize sodium using the method described below, and discard the valves in the same way as ordinary valves.

(3) How to Neutralize Sodium
Place a container filled with more than 10 liters of water in a well ventilated large space.
Wear rubber gloves and goggles, and carefully take out broken valves from the cylinder head.
Put a broken valve in the water-filled container and quickly get away from the container at least 2 or 3 m (6.6 or 10 ft.).

Caution
- **Valves must be neutralized one at a time.**
- **Put a valve in the container only after sodium in the preceding one has completely reacted with water.**

Keep fire away from the container during the neutralization.
The resulting hydrogen gas is highly explosive.
When the reaction has finished (there is no more generation of hydrogen gas), take the valves out of the container with large tweezers or the like.

NOTE
The reaction occurs when water enters the cavity in the valve. Hydrogen gas may be trapped inside the valve, temporarily blocking the water passage. In such a case, wait until hydrogen gas in released and remaining sodium reacts with water.
After the neutralization of sodium, water in the container contains sodium hydroxide and is highly alkaline. The water solution should be disposed of according to local regulations.

Caution
- **Do not let the solution contact the eyes or the skin.**
- **Should it get in the eyes, immediately flush them with clean water thoroughly, and receive medical attention. When it contacts the skin, wash with ample amounts of clean water.**

INSPECTION

For inspection, only variations from the two camshaft engine are described below.
(Refer to page 11A-11-2 and 3)

© Mitsubishi Motors Corporation Mar. 2000

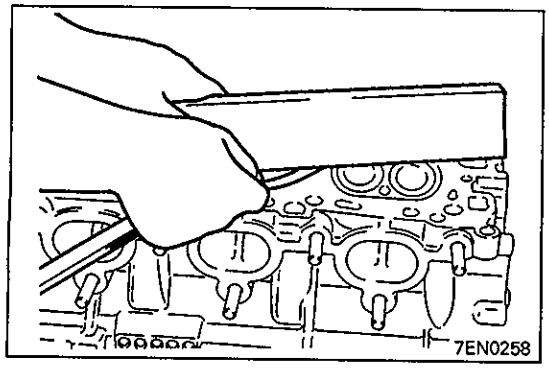

CYLINDER HEAD

Cylinder head height (when new):
131.9 – 132.1 mm (5.193 – 5.201 in.)

VALVE

Margin
Standard value:
1.0 mm (0.039 in.) ..... Intake
1.5 mm (0.059 in.) ..... Exhaust
Limit:
0.5 mm (0.028 in.) ..... Intake
1.0 mm (0.039 in.) ..... Exhaust

Overall length
Standard value:
6G72, 6G74 engine <Except GDI>
106.28 mm (4.1842 in.) ..... Intake
105.40 mm (4.1496 in.) ..... Exhaust
6G73 engine
107.28 mm (4.2236 in.) ..... Intake
106.10 mm (4.1776 in.) ..... Exhaust
6G74-GDI engine
102.28 mm (4.0268 in.) ..... Intake
101.40 mm (3.9921 in.) ..... Exhaust
Limit:
6G72, 6G74 engine <Except GDI>
105.78 mm (4.1646 in.) ..... Intake
104.90 mm (4.1299 in.) ..... Exhaust
6G73 engine
106.78 mm (4.2039 in.) ..... Intake
105.60 mm (4.1575 in.) ..... Exhaust
6G74-GDI engine
101.78 mm (4.0071 in.) ..... Intake
100.90 mm (3.9724 in.) ..... Exhaust

VALVE SPRING

6G72 engine
SIGMA up to 1992 models; 3000GT for Europe and General Export
Free height: 46.9 mm (1.846 in.)
Limit: 45.9 mm (1.807 in.)
Squareness: 2° or less
Limit: 4°
SIGMA after 1993 models; 3000GT for Australia
Free height: 46.4 mm (1.827 in.)
Limit: 45.4 mm (1.787 in.)
Squareness: 2° or less
Limit: 4°
6G73, 6G74 engine
Free height: 46.4 mm (1.827 in.)
Limit: 45.4 mm (1.787 in.)
Squareness: 2° or less
Limit: 4°

© Mitsubishi Motors Corporation Mar. 2000

VALVE GUIDE

Valve guide to valve stem clearance
0.02 – 0.05 mm (0.008 – 0.0020 in.) ..... Intake
0.05 – 0.09 mm (0.002 – 0.0035 in.) ..... Exhaust
Limit:
0.10 mm (0.0039 in.) ..... Intake
0.15 mm (0.0059 in.) ..... Exhaust

VALVE SEAT

Valve stem projection
Standard value:
47.10 mm (1.8543 in.) ..... Intake
46.60 mm (1.8346 in.) ..... Exhaust
Limit:
47.60 mm (1.8740 in.) ..... Intake
47.10 mm (1.8543 in.) ..... Exhaust

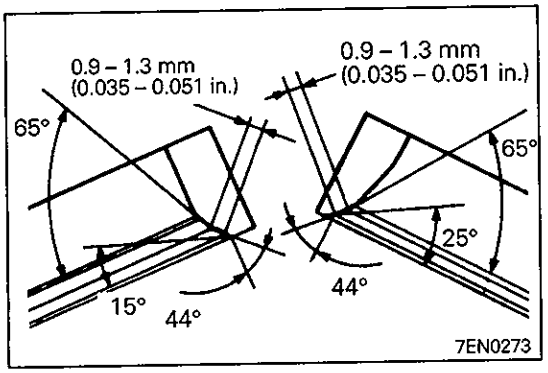

VALVE SEAT RECONDITIONING PROCEDURE

(1) Refer to page 11A-11-5.

VALVE SEAT REPLACEMENT PROCEDURE

(1) Refer to page 11A-11-5. The only difference is the reboring size.

6G72, 6G74 engine
Intake valve seat hole diameter:
0.3 O.S. 36.30 – 36.33 mm (1.4291 – 1.4303 in.)
0.6 O.S. 36.60 – 36.63 mm (1.4409 – 1.4421 in.)
Exhaust valve seat hole diameter:
0.3 O.S. 33.30 – 33.33 mm (1.3110 – 1.3122 in.)
0.6 O.S. 33.60 – 33.63 mm (1.3228 – 1.3240 in.)
6G73 engine
Intake valve seat hole diameter:
0.3 O.S. 34.30 – 34.33 mm (1.3504 – 1.3516 in.)
0.6 O.S. 34.60 – 34.63 mm (1.3622 – 1.3634 in.)
Exhaust valve seat hole diameter:
0.3 O.S. 30.80 – 30.83 mm (1.2126 – 1.2138 in.)
0.6 O.S. 31.10 – 31.13 mm (1.2244 – 1.2256 in.)

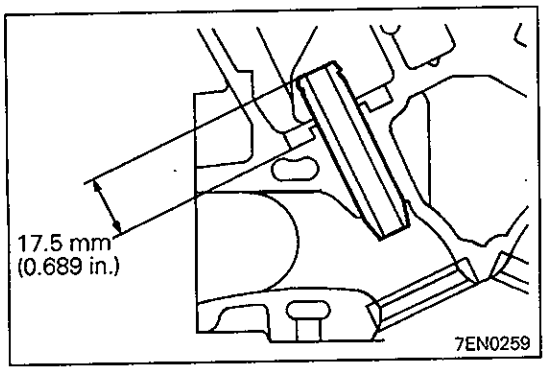

VALVE GUIDE REPLACEMENT PROCEDURE

(1) Refer to page 11A-11-6. The differences are the valve guide hole diameter and guide mounting height.

Valve guide hole diameter:
0.05 O.S. 12.05 – 12.07 mm (0.4744 – 0.4752 in.)
0.25 O.S. 12.25 – 12.27 mm (0.4823 – 0.4831 in.)
0.50 O.S. 12.50 – 12.52 mm (0.4921 – 0.4929 in.)

© Mitsubishi Motors Corporation Mar. 2000

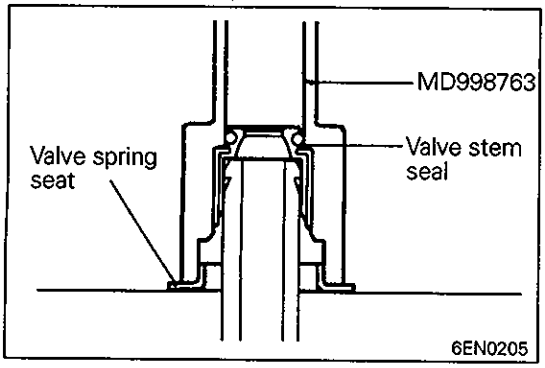

SERVICE POINTS OF INSTALLATION

◆A◆ INSTALLATION OF VALVE STEM SEAL

(1) Install the valve spring seat.
(2) Using the special tool, install a new stem seal to the valve guide.

Caution
- **Do not reuse the valve stem seal.**

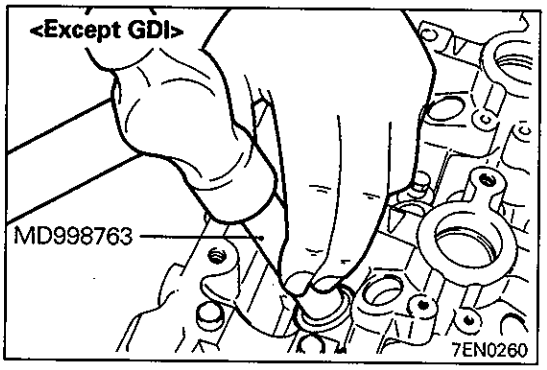

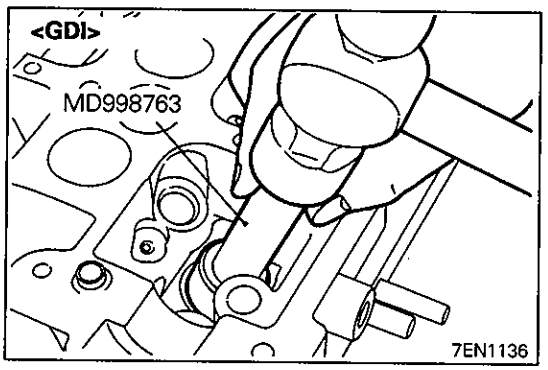

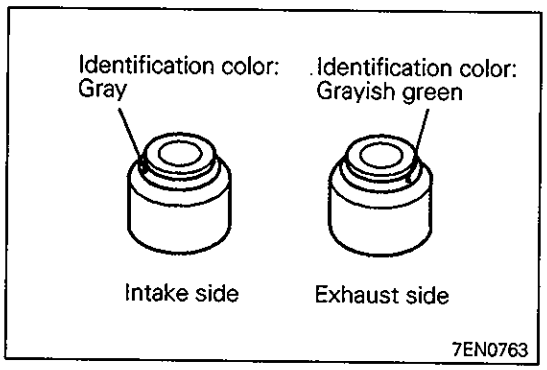

NOTE
Note that the valve stem seals are different between that used on the intake side and that on the exhaust side.

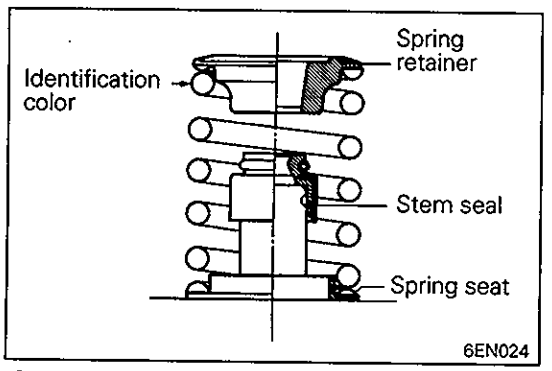

◆B◆ INSTALLATION OF VALVE SPRINGS

(1) Install the valve spring so that its end with identification color is positioned on the rocker arm end.

© Mitsubishi Motors Corporation Mar. 2000

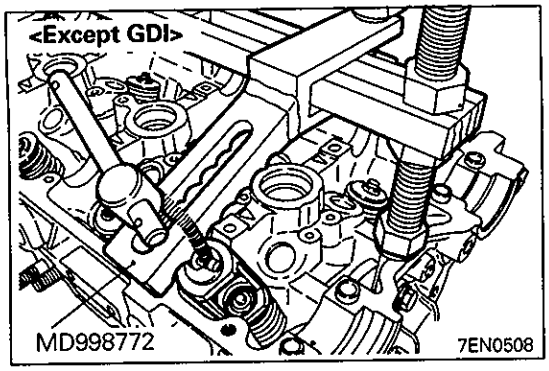

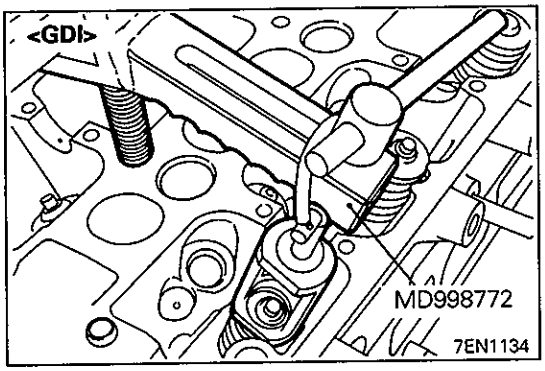

◆C◆ INSTALLATION OF RETAINER LOCKS

(1) Using the special tool, compress the valve spring and insert the retainer lock into position.

◆D◆ INSTALLATION OF CYLINDER HEAD GASKET

Caution

- **Do not apply sealant to cylinder head gasket.**

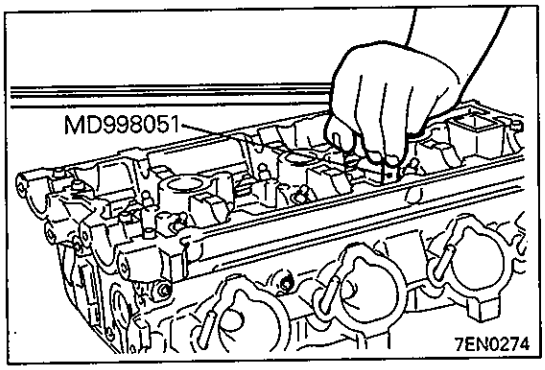

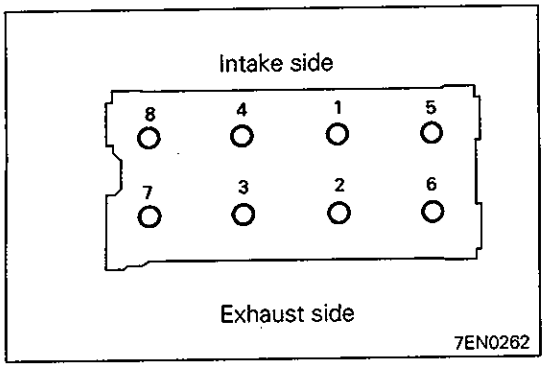

◆E◆ INSTALLATION OF CYLINDER HEAD BOLTS

<Without turbocharger>

(1) Tighten the cylinder head bolts in the sequence shown. Each bolt should be tightened in two to three steps, torquing progressively. Tighten to specified torque in the final sequence.

<With turbocharger>

(1) First tighten the cylinder head bolts to 125 Nm (12.5 kgm, 90 ft.lbs.).
(2) Loosen all the bolts, and tighten them again to 125 Nm (12.5 kgm, 90 ft.lbs.).

© Mitsubishi Motors Corporation Mar. 2000

Added

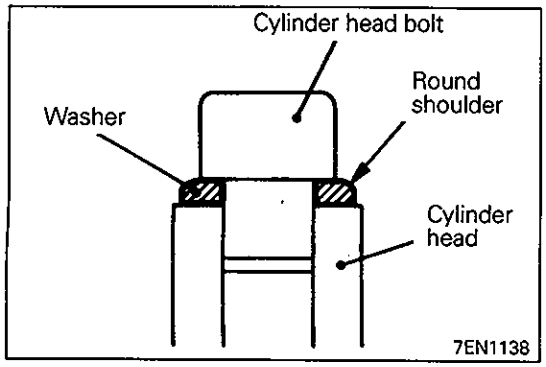

◆F◆ INSTALLATION OF CYLINDER HEAD BOLT

(1) Fit washers to the cylinder head bolts and install the bolts in the bolt holes in the cylinder head.
Make sure of the correct orientation of the washer when installed.

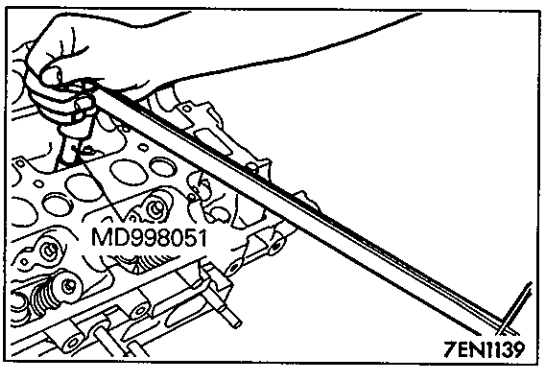

(2) Tighten the cylinder head bolts to the specified torque in the order shown.
(3) Loosen all bolts.
(4) Tighten the cylinder head bolts to the specified torque in the order shown.

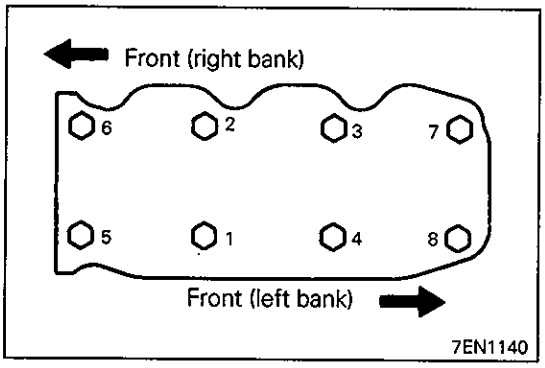

13. OIL PAN AND OIL PUMP

REMOVAL AND INSTALLATION

(SIGMA – Two-camshaft 12-valve engine models; four-camshaft engine models fabricated up to 1992 (except for GCC); four-camshaft engine models for GCC fabricated up to 1993)

(GALANT)

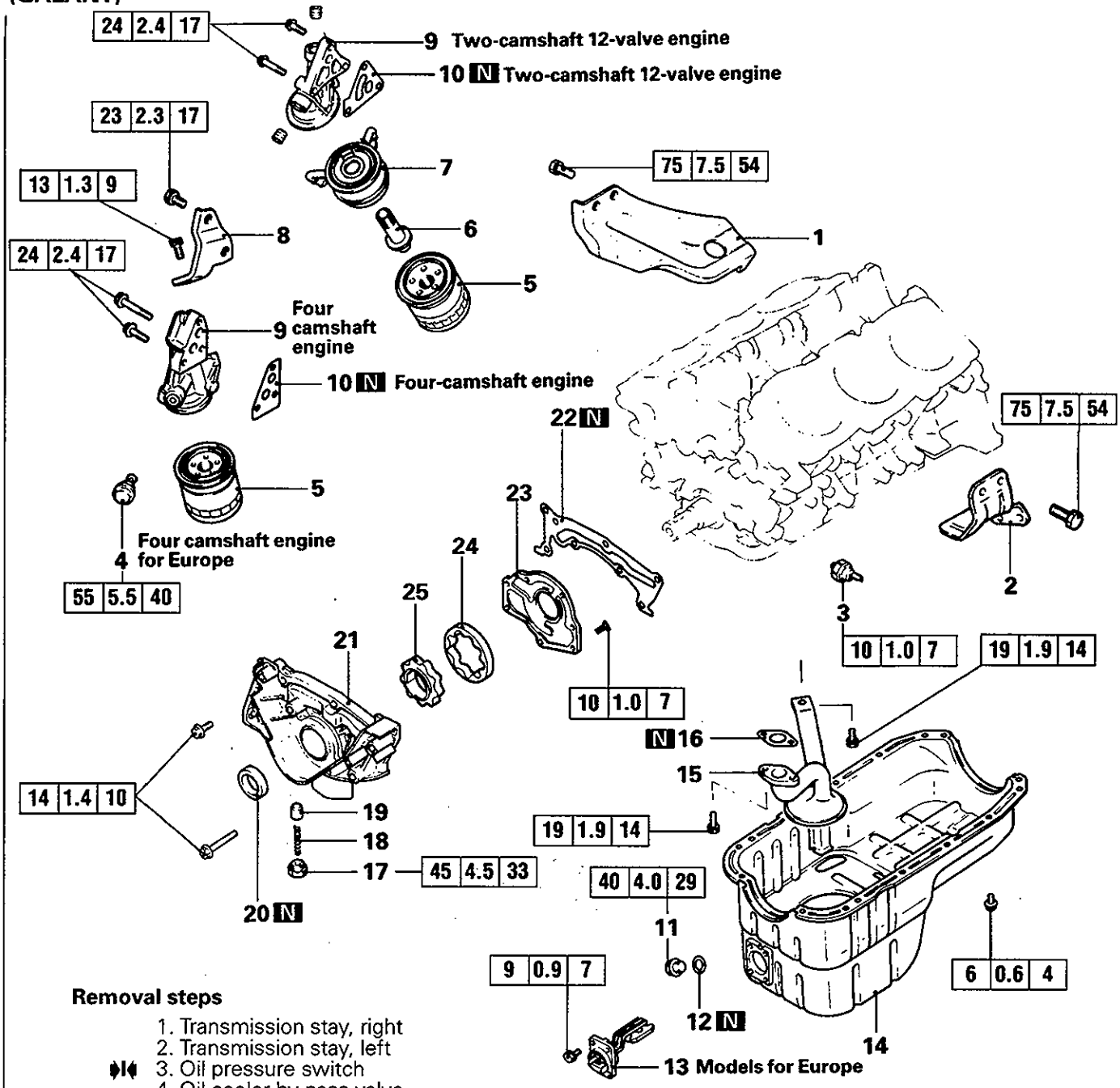

Removal steps

1. Transmission stay, right
2. Transmission stay, left
- ◆I◆ 3. Oil pressure switch
4. Oil cooler by-pass valve
- ◆H◆ 5. Oil filter
6. Oil cooler bolt } Two camshaft 12-valve engine
- ◆G◆ 7. Oil cooler assembly }
8. Oil filter bracket stay
9. Oil filter bracket
10. Oil filter bracket gasket
11. Drain plug
- ◆F◆ 12. Drain plug gasket
- ◆E◆ 13. Oil level sensor
- ◇A◇ ◆D◆ 14. Oil pan
15. Oil screen
16. Oil screen gasket
17. Plug
18. Relief spring
19. Relief plunger
- ◆C◆ 20. Crankshaft front oil seal
- ◆A◆ 21. Oil pump case
22. Oil pump gasket
23. Oil pump cover
- ◇B◇ ◆K◆ 24. Oil pump outer rotor
- ◇B◇ ◆K◆ 25. Oil pump inner rotor

7EN0365

© Mitsubishi Motors Corporation Nov. 1995

REMOVAL AND INSTALLATION

(SIGMA – Four camshaft engine models except for GCC fabricated from 1993; four-camshaft engine models for GCC fabricated from 1994)

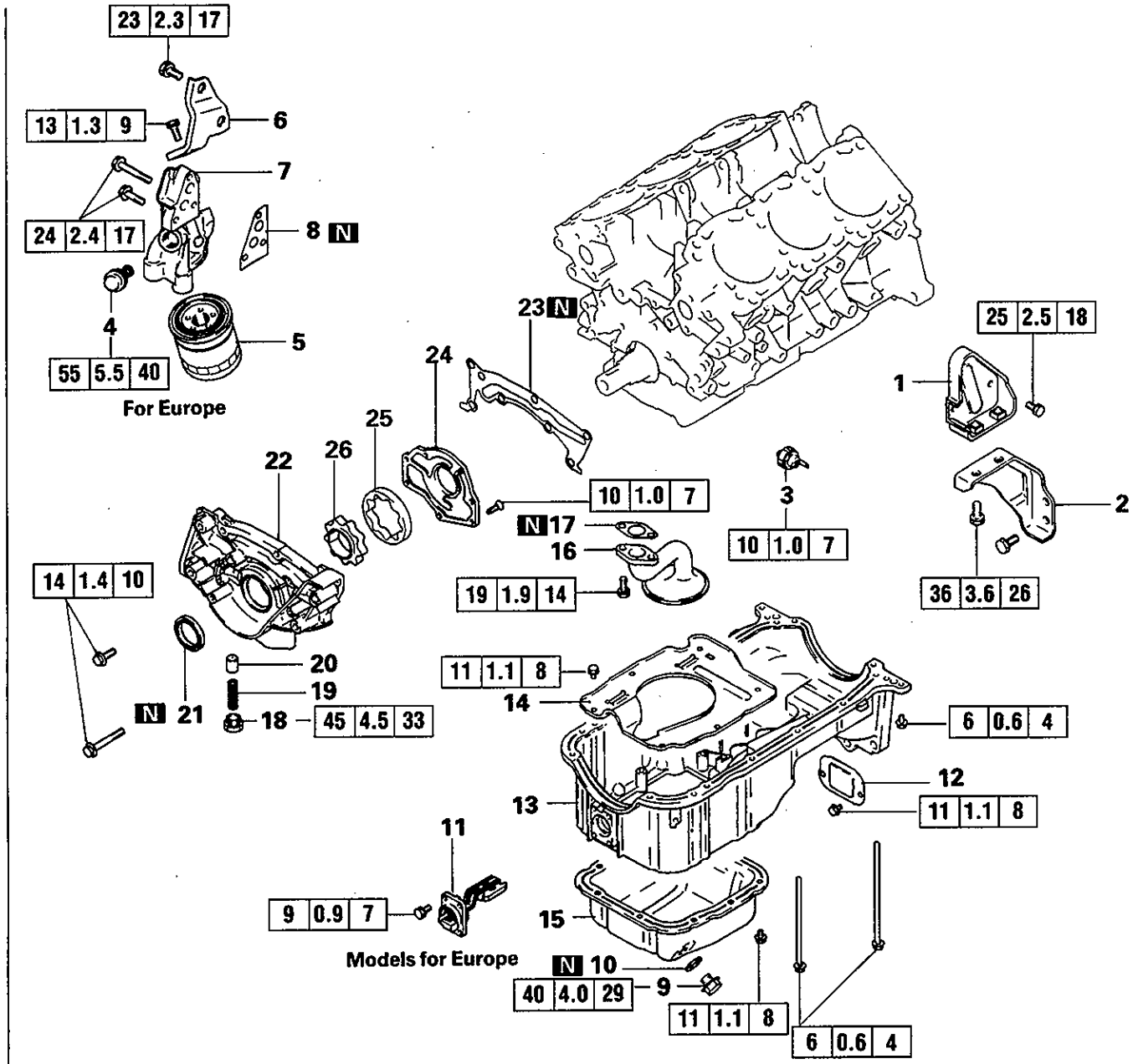

Removal steps

1. Transmission stay, right
2. Transmission stay, left "B"
- ◆I◆ 3. Oil pressure switch
4. Oil cooler by-pass valve
- ◆H◆ 5. Oil filter
6. Oil filter bracket stay
7. Oil filter bracket
8. Oil filter bracket gasket
9. Drain plug
- ◆F◆ 10. Drain plug gasket
- ◆E◆ 11. Oil level sensor
12. Cover
- ◇C◇ ◆M◆ 13. Oil pan, upper
14. Baffle plate
- ◇D◇ ◆L◆ 15. Oil pan, lower
16. Oil screen
17. Oil screen gasket
18. Plug
19. Relief spring
20. Relief plunger
- ◆C◆ 21. Crankshaft front oil seal
- ◆A◆ 22. Oil pump case
23. Oil pump gasket
24. Oil pump cover
- ◇B◇ ◆K◆ 25. Oil pump outer rotor
- ◇B◇ ◆K◆ 26. Oil pump inner rotor

7EN0598

© Mitsubishi Motors Corporation Nov. 1995

REMOVAL AND INSTALLATION

(3000GT)

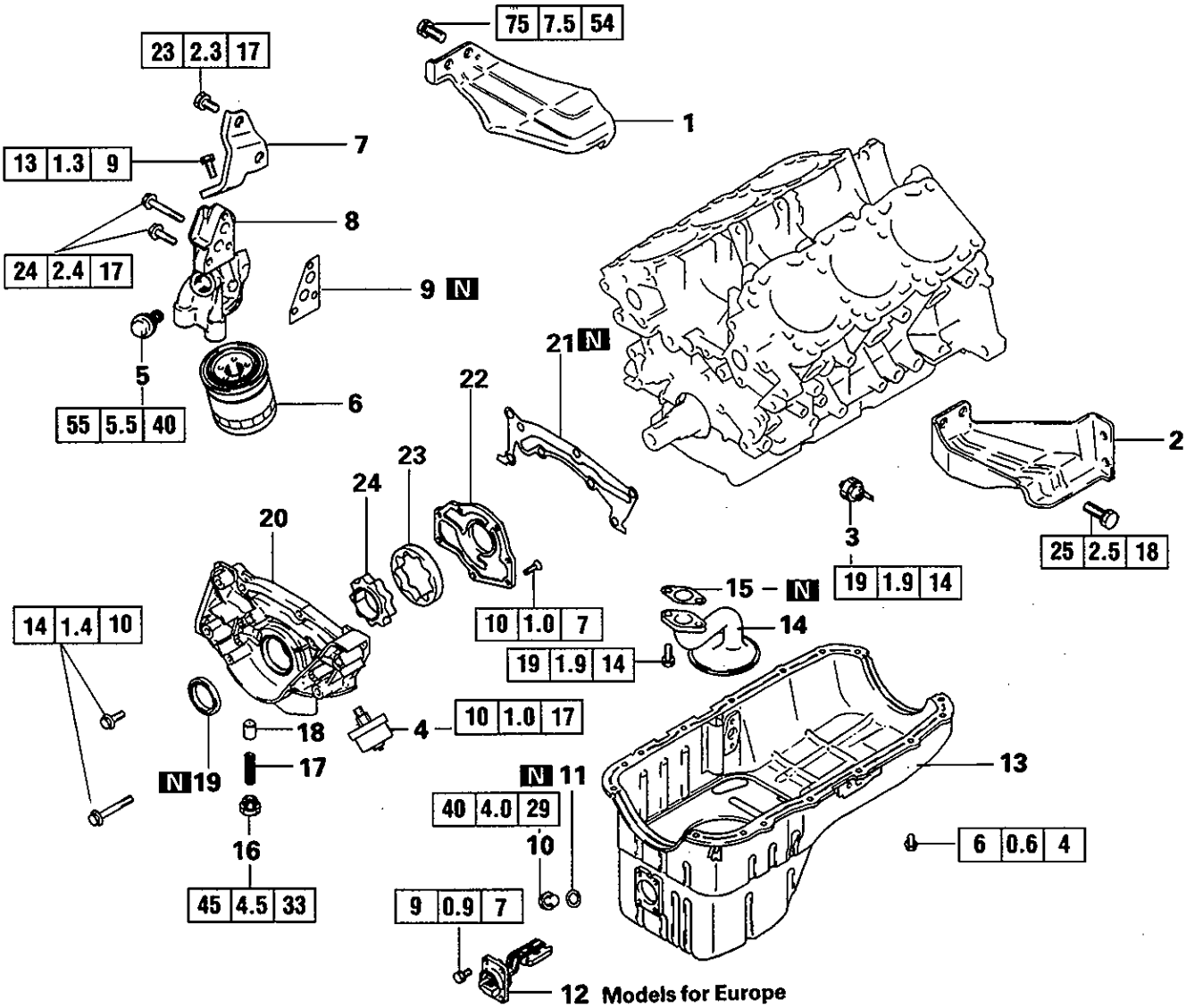

Removal steps

1. Transmission stay, right
2. Transmission stay, left
- ◗I◖ 3. Oil pressure switch
- ◗J◖ 4. Oil pressure gauge unit
5. Oil cooler by-pass valve
- ◗H◖ 6. Oil filter
7. Oil filter bracket stay
8. Oil filter bracket
9. Oil filter bracket gasket
10. Drain plug
- ◗F◖ 11. Drain plug gasket
- ◗E◖ 12. Oil level sensor
- ◊A◊ ◗D◖ 13. Oil pan
14. Oil screen
15. Oil screen gasket
16. Plug
17. Relief spring
18. Relief plunger
- ◗C◖ 19. Crankshaft front oil seal
- ◗A◖ 20. Oil pump case
21. Oil pump gasket
22. Oil pump cover
- ◊B◊ ◗K◖ 23. Oil pump outer rotor
- ◊B◊ ◗K◖ 24. Oil pump inner rotor

7EN0559

© Mitsubishi Motors Corporation Nov. 1995

REMOVAL AND INSTALLATION

(Two-camshaft 12-valve engine for rear wheel drive vehicle)

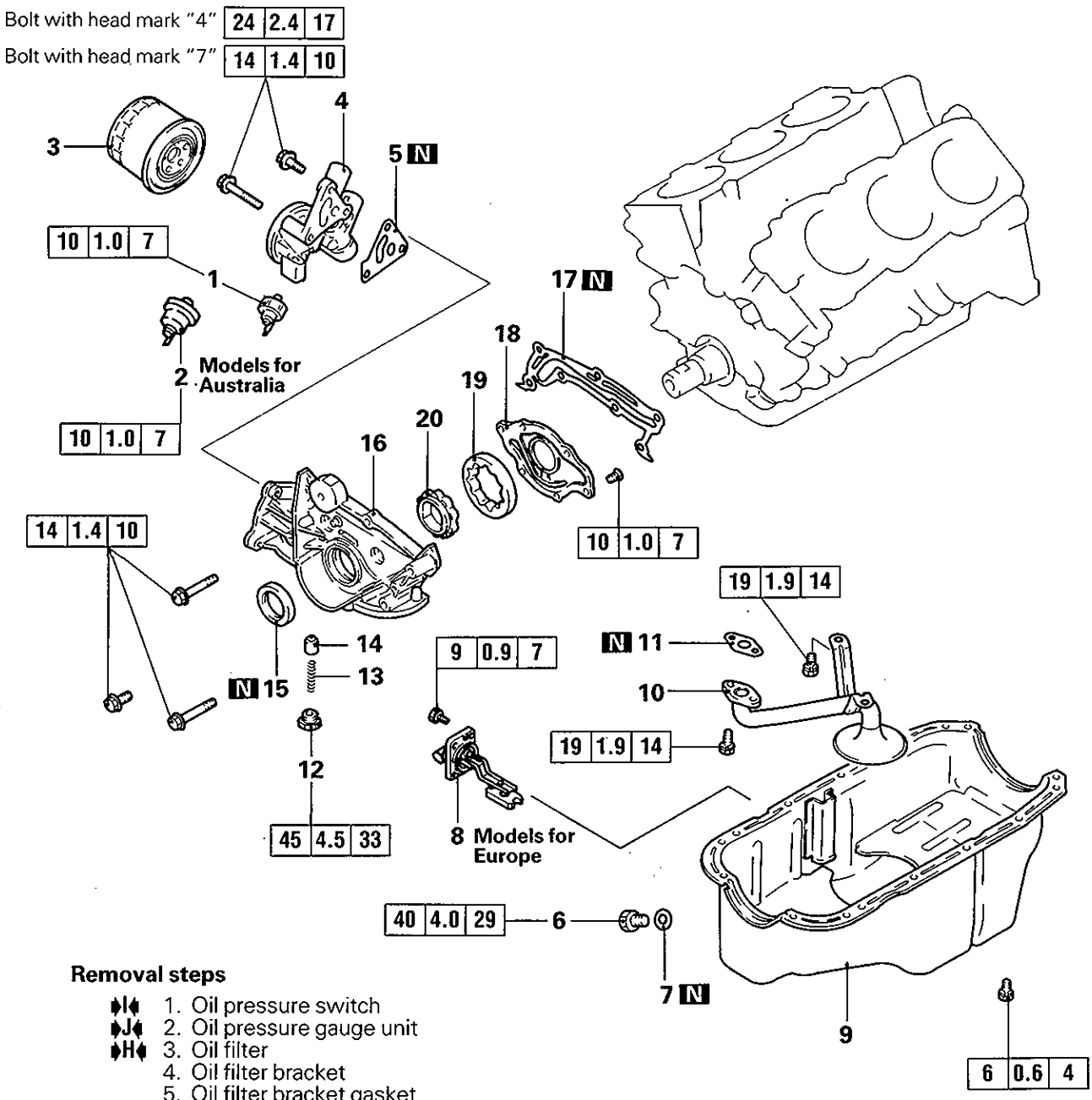

Removal steps

- ◆I◆ 1. Oil pressure switch
- ◆J◆ 2. Oil pressure gauge unit
- ◆H◆ 3. Oil filter
- 4. Oil filter bracket
- 5. Oil filter bracket gasket
- 6. Drain plug
- ◆F◆ 7. Drain plug gasket
- ◆E◆ 8. Oil level sensor
- ◇A◇ ◆D◆ 9. Oil pan
- 10. Oil screen
- 11. Oil screen gasket
- 12. Plug
- 13. Relief spring
- 14. Relief plunger
- ◆C◆ 15. Crankshaft front oil seal
- ◆A◆ 16. Oil pump case
- 17. Oil pump gasket
- 18. Oil pump cover
- ◇B◇ ◆K◆ 19. Oil pump outer rotor
- ◇B◇ ◆K◆ 20. Oil pump inner rotor

7EN0366

© Mitsubishi Motors Corporation Aug. 1994

REMOVAL AND INSTALLATION

(Four-camshaft engine for rear wheel drive vehicle)

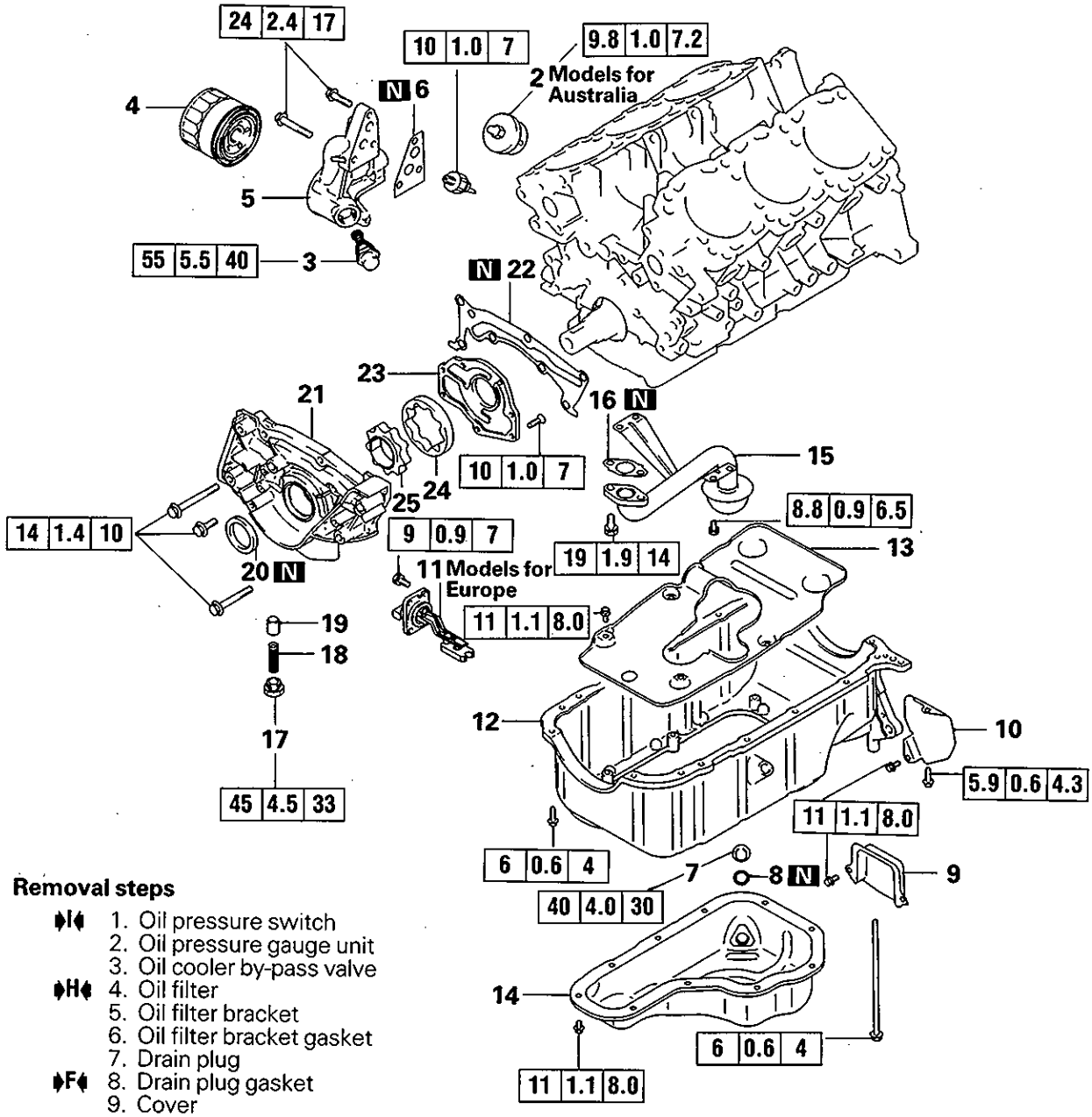

Removal steps

- ◆I◆ 1. Oil pressure switch
- 2. Oil pressure gauge unit
- 3. Oil cooler by-pass valve
- ◆H◆ 4. Oil filter
- 5. Oil filter bracket
- 6. Oil filter bracket gasket
- 7. Drain plug
- ◆F◆ 8. Drain plug gasket
- 9. Cover
- 10. Cover
- ◆E◆ 11. Oil level sensor
- ◇C◇ ◆M◆ 12. Oil pan, upper
- 13. Baffle plate
- ◇D◇ ◆L◆ 14. Oil pan, lower
- 15. Oil screen
- 16. Oil screen gasket
- 17. Plug
- 18. Relief spring
- 19. Relief plunger
- ◆C◆ 20. Crankshaft oil seal
- 21. Oil pump case
- 22. Oil pump case gasket
- 23. Oil pump cover
- ◇B◇ ◆K◆ 24. Oil pump outer rotor
- ◇B◇ ◆K◆ 25. Oil pump inner rotor

7EN0683

© Mitsubishi Motors Corporation Aug. 1994

REMOVAL AND INSTALLATION

(PAJERO for 24-valve engine)

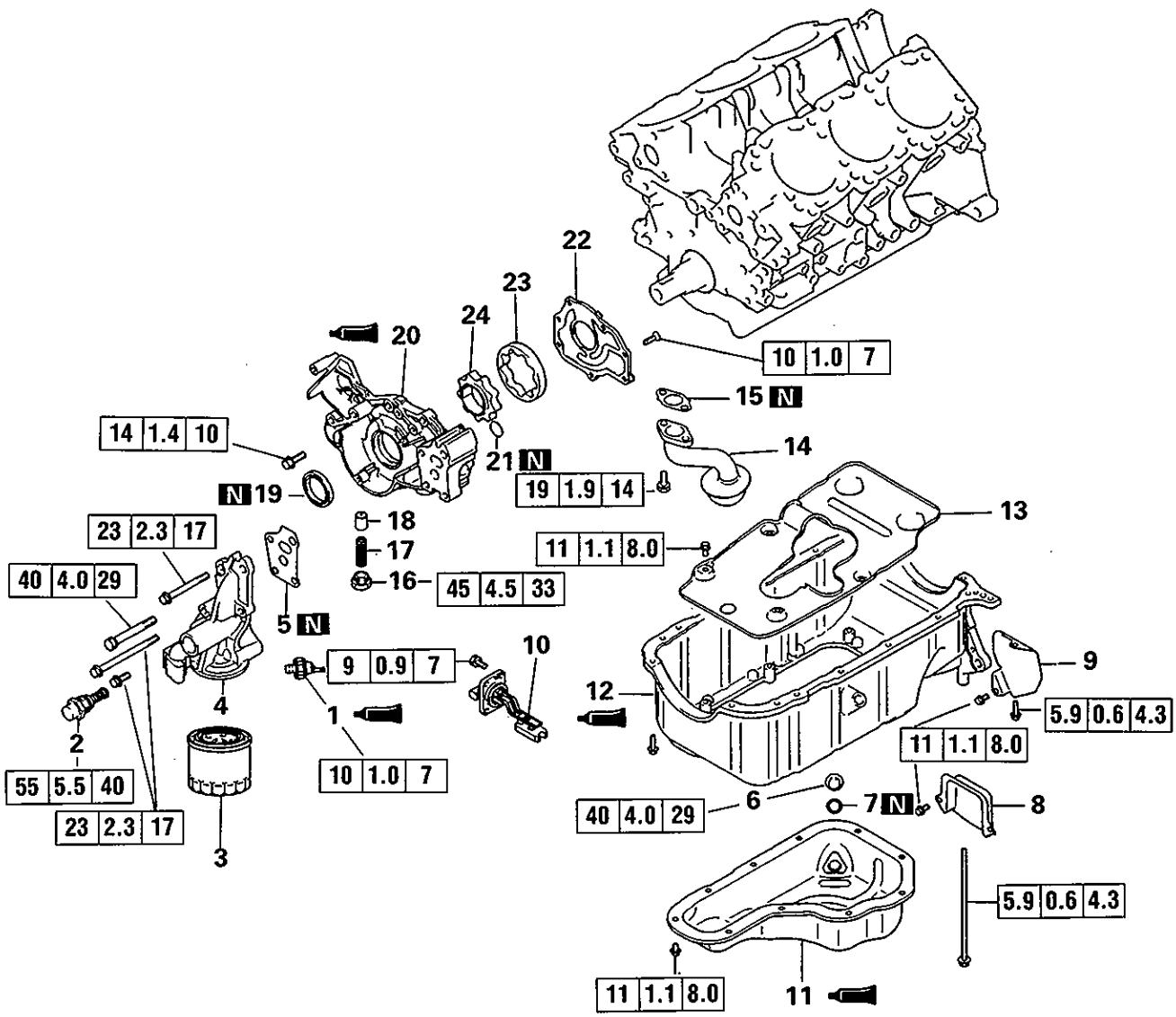

Removal steps

- ◆I◆ 1. Oil pressure switch
- 2. Oil cooler by-pass valve
- ◆H◆ 3. Oil filter
- 4. Oil filter bracket
- 5. Oil filter bracket gasket
- 6. Drain plug
- ◆F◆ 7. Drain plug gasket
- 8. Cover
- 9. Cover
- 10. Oil level sensor
- ◇D◇ ◆L◆ 11. Oil pan, lower
- ◇C◇ ◆M◆ 12. Oil pan, upper
- 13. Baffle plate
- 14. Oil screen
- 15. Oil screen gasket
- 16. Plug
- 17. Relief spring
- 18. Relief plunger
- ◆C◆ 19. Crankshaft oil seal
- ◆B◆ 20. Oil pump case
- 21. O-ring
- 22. Oil pump cover
- ◇B◇ ◆K◆ 23. Oil pump outer rotor
- ◇B◇ ◆K◆ 24. Oil pump inner rotor

7EN0787

© Mitsubishi Motors Corporation Aug. 1994

REMOVAL AND INSTALLATION
(PAJERO SPORT/CHALLENGER, L200, L400)

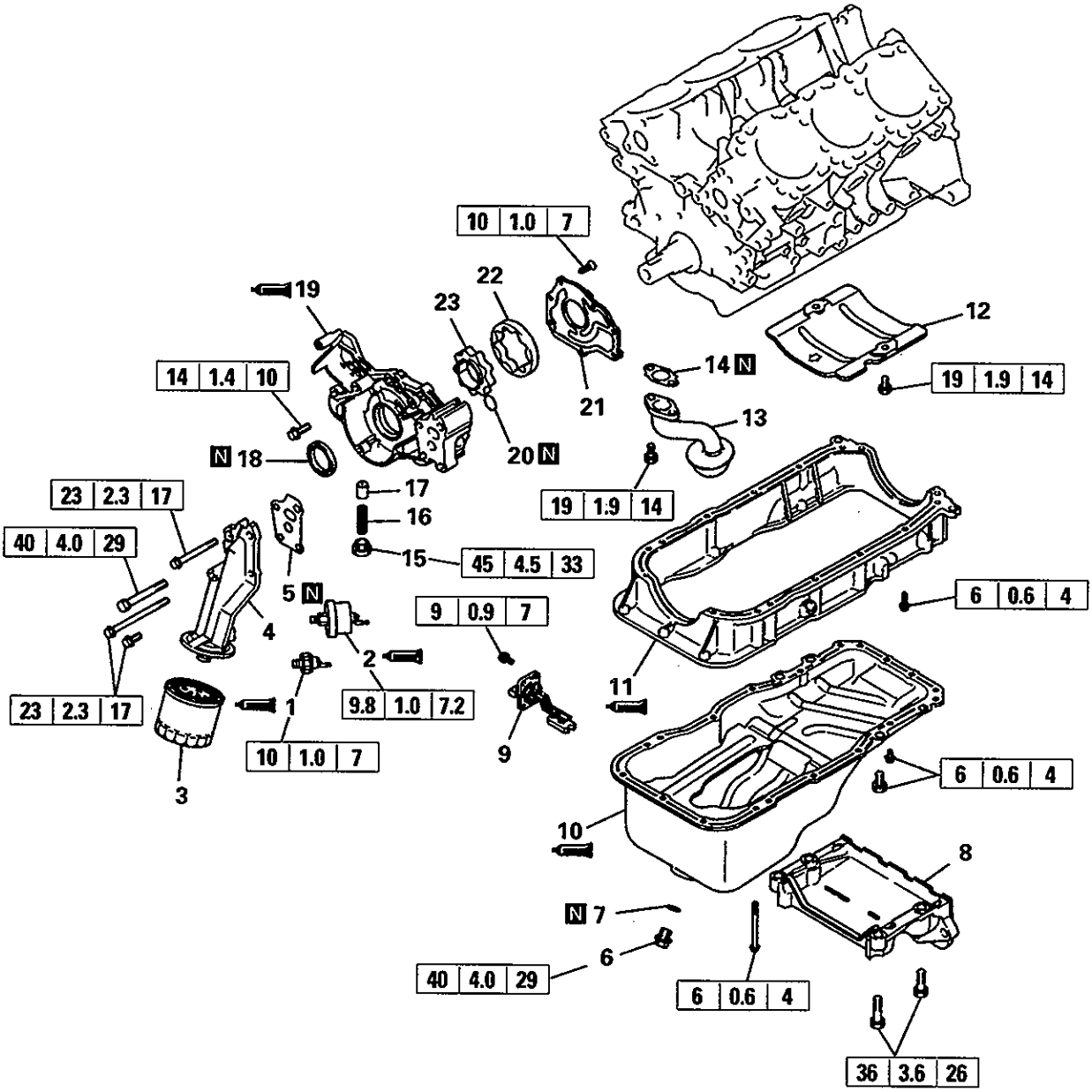

Removal steps

- ◆I◆ 1. Oil pressure switch
- ◆J◆ 2. Oil pressure gauge unit – Vehicles for Europe, PAJERO SPORT/CHALLENGER and L200
- ◆H◆ 3. Oil filter
- 4. Oil filter bracket
- 5. Oil filter bracket gasket
- 6. Drain plug
- ◆F◆ 7. Drain plug gasket
- 8. Transmission stay – 2WD vehicle
- 9. Oil level sensor – L400 and PAJERO SPORT/ CHALLENGER for Europe
- ◇D◇ ◆O◆10. Oil pan, lower
- ◇D◇ ◆N◆11. Oil pan, upper
- 12. Baffle plate
- 13. Oil screen
- 14. Oil screen gasket
- 15. Plug
- 16. Relief spring
- 17. Relief plunger
- ◆C◆18. Crankshaft oil seal
- ◆B◆19. Oil pump case
- 20. O-ring
- 21. Oil pump cover
- ◇B◇ ◆K◆22. Oil pump outer rotor
- ◇B◇ ◆K◆23. Oil pump inner rotor

7EN1477

© Mitsubishi Motors Corporation May 1999

REMOVAL AND INSTALLATION

(2001 model PAJERO)

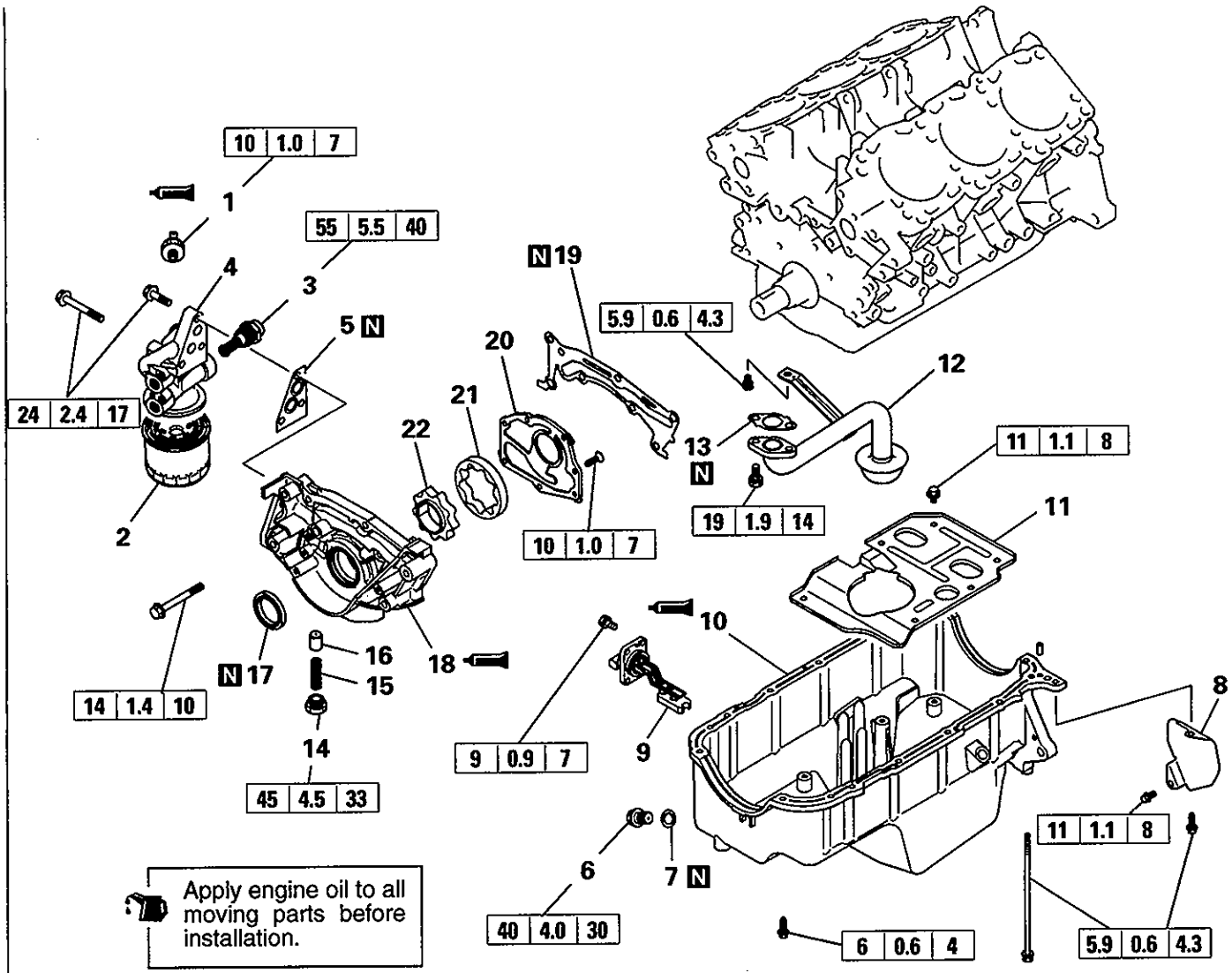

Removal steps

- ◆I◆ 1. Oil pressure switch
- ◆H◆ 2. Oil filter
- 3. Oil cooler by-pass valve
- 4. Oil filter bracket
- 5. Oil filter bracket gasket
- 6. Drain plug
- ◆F◆ 7. Drain plug gasket
- 8. Cover
- 9. Oil level sensor – Vehicles for Europe
- ◇E◇ ◆P◆ 10. Oil pan
- 11. Baffle plate
- 12. Oil screen
- 13. Oil screen gasket
- 14. Relief plug
- 15. Relief spring
- 16. Relief plunger
- ◆C◆ 17. Oil seal
- 18. Oil pump case
- 19. Oil pump case gasket
- 20. Oil pump cover
- ◇B◇ ◆K◆ 21. Oil pump outer rotor
- ◇B◇ ◆K◆ 22. Oil pump inner rotor

7EN1573

© Mitsubishi Motors Corporation Mar. 2000

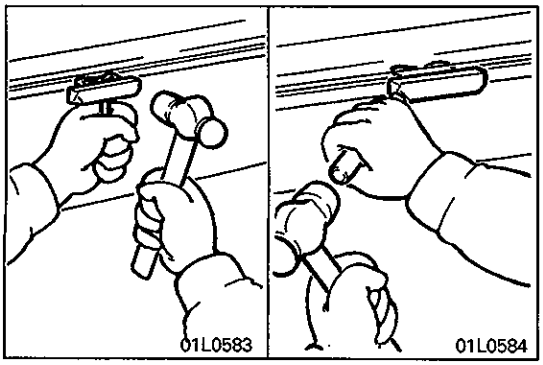

SERVICE POINTS OF DISASSEMBLY

◊A◊ REMOVAL OF OIL PAN

(1) Knock the special tool deeply between the oil pan and the cylinder block.
(2) Hitting the side of the special tool, slide the oil pan to remove it.

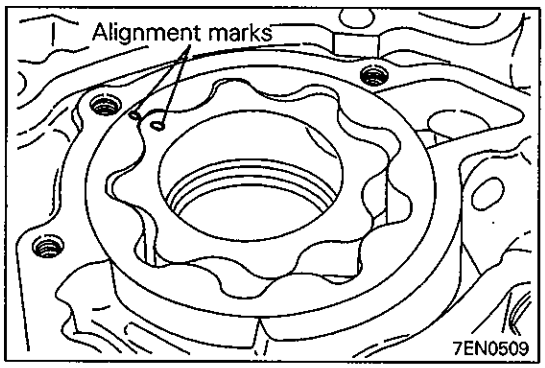

◊B◊ REMOVAL OF OIL PUMP OUTER AND INNER ROTORS

(1) Mark the oil pump outer and inner rotors for reference on reassembly.

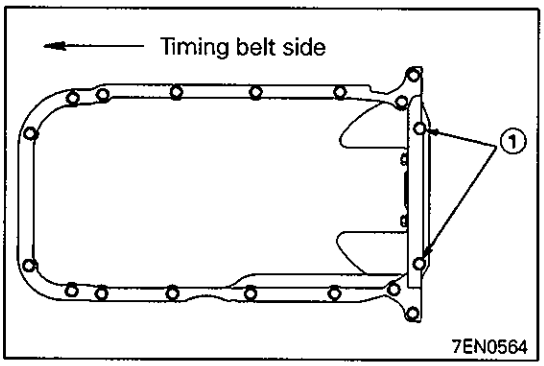

◊C◊ REMOVAL OF OIL PAN UPPER

(1) Remove bolts ① shown in the illustration.
(2) Remove all other bolts.

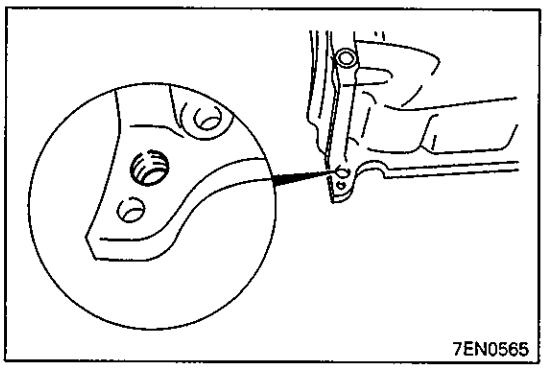

(3) Remove the oil pan by screwing bolts in the threaded holes (at both ends) to separate it from the cylinder block.

Caution

- **Do not use a scraper or the special tool (MD998727) to remove the oil pan upper.**

◊D◊ REMOVAL OF OIL PAN (UPPER AND LOWER)

(1) Apply a wooden pad at a side of the oil pan, and knock the pad with a plastic hammer to remove the oil pan.

Caution

- **Do not use a scraper or the special tool (MD998727) to remove the oil pan.**

© Mitsubishi Motors Corporation Aug. 1994

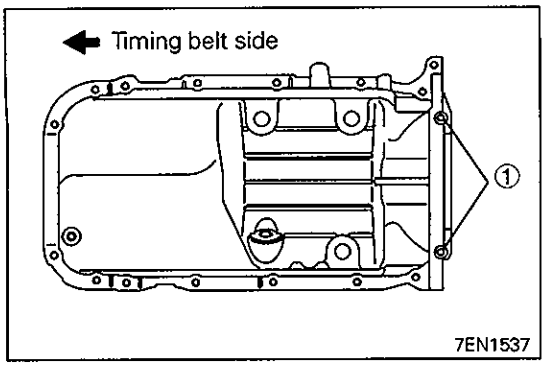

◊E◊ REMOVAL OF OIL PAN

(1) Remove bolts ① shown in the illustration.
(2) Remove all other bolts.

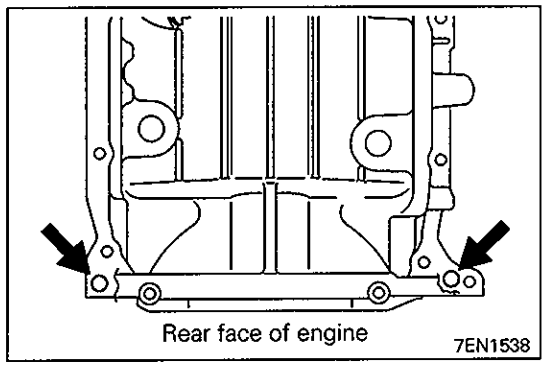

(3) Screw M10 bolts into the bolt holes shown (on both ends) to raise and remove the oil pan.

Caution

- **Scraper or special tool (MD998727) should not be used to remove the oil pan.**

INSPECTION

OIL PUMP

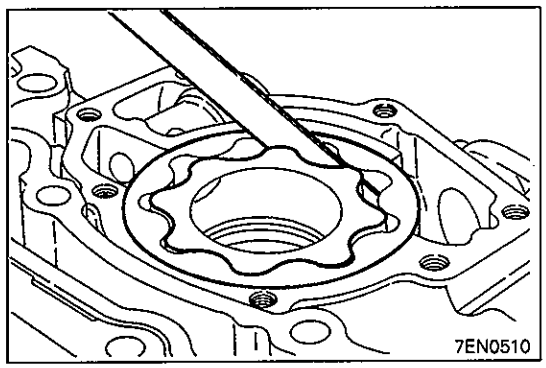

(1) Check the tip clearance.

Standard value: 0.06 – 0.18 mm (0.0024 – 0.0070 in.)

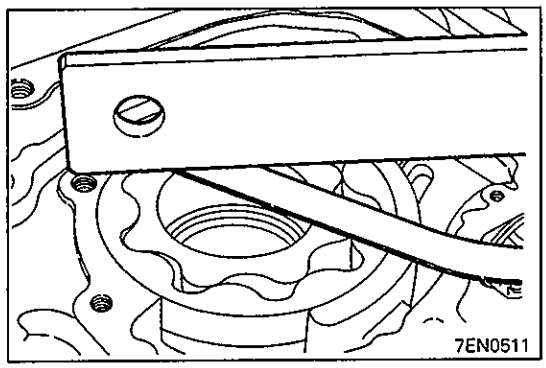

(2) Check the side clearance.

Standard value: 0.04 – 0.10 mm (0.0016 – 0.0039 in.)

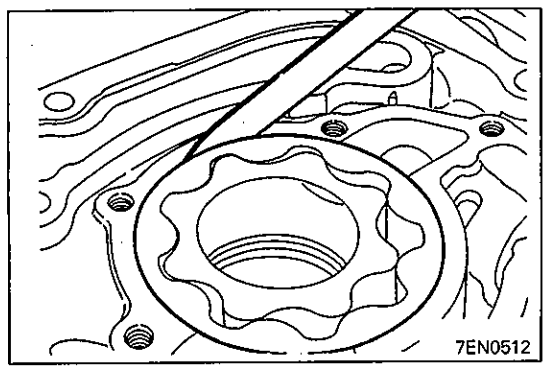

(3) Check the body clearance.

Standard value: 0.10 – 0.18 mm (0.0040 – 0.0070 in.)

Limit: 0.35 mm (0.0138 in.)

OIL FILTER BRACKET

(1) Ensure that there is no damage on the oil filter installation surface.
(2) Check for cracks or oil leaks.

RELIEF PLUNGER AND SPRING

(1) Insert the relief plunger in the oil pump body and check to see if it operates smoothly.
(2) Check the relief spring for breakage or sagging.

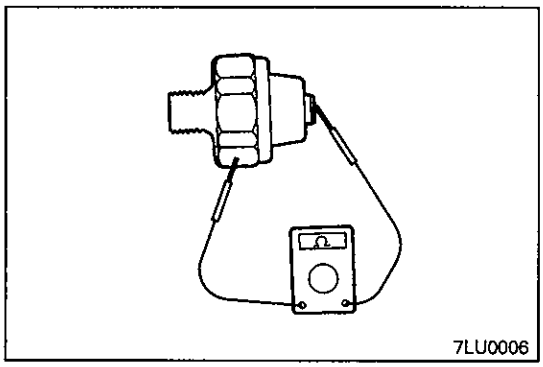

OIL PRESSURE SWITCH

(1) Connect a tester (ohm range) between the terminal and the body and check for conductivity. If there is no conductivity, replace the switch.

Intentionally blank

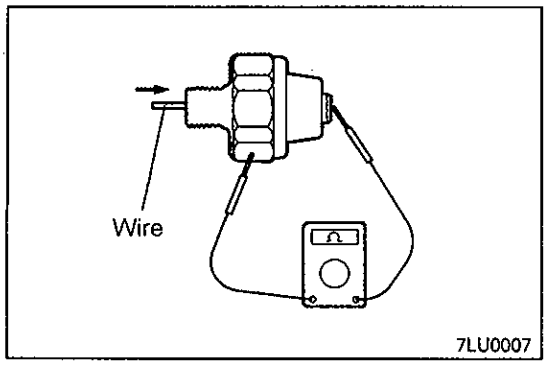

(2) Next insert a wire through the oil hole, pushing it slightly. There should be no conductivity (resistance should be infinite). If there is conductivity even when wedge is pushed, replace the switch.
(3) Or, if there is no conductivity when a 50 kPa (71 psi.) pressure is placed through the oil hole, the switch is operating properly. Check at this time to see that there is no air pressure leakage. If there is air pressure leakage, the diaphragm is broken, and the switch should be replaced.

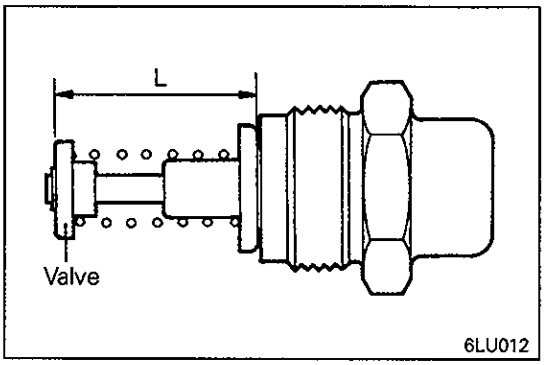

OIL COOLER BYPASS VALVE (Four-camshaft engines for Europe and two-camshaft 24-valve engines for PAJERO/MONTERO)

(1) Make sure that the valve moves smoothly.
(2) Ensure that the dimension L measures the standard value under normal temperature and humidity.

Dimension L: 34.5 mm (1.358 in.)

(3) The dimension must be the standard value when measured after the valve has been dipped in 100°C (212°F) oil.

Dimension L: 40 mm (1.57 in.) or more

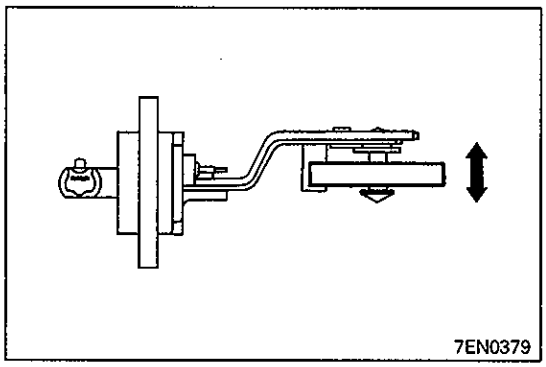

OIL LEVEL SENSOR (Engines for Europe and for L400)

(1) Put the oil level sensor in the oil, then move the float up and down with the oil at a temperature either lower than 40°C (104°F) or higher than 80°C (176°F), and check for continuity.

40°C (104°F)

Float position	Switch ON/OFF
Condition when down	ON (continuity)
Condition when up	ON (continuity)

80°C (176°F)

Float position	Switch ON/OFF
Condition when down	OFF (no continuity)
Condition when up	ON (continuity)

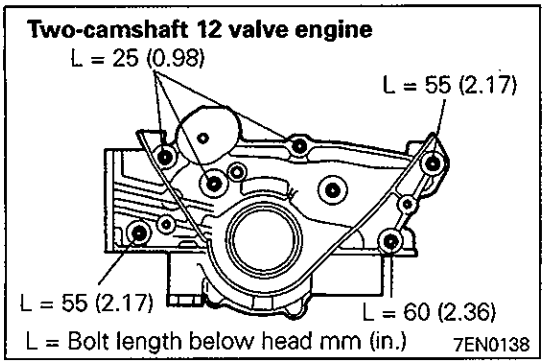

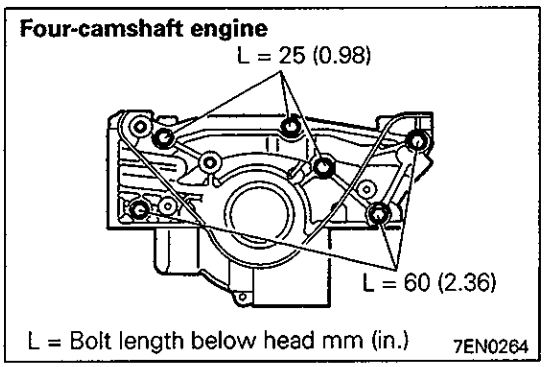

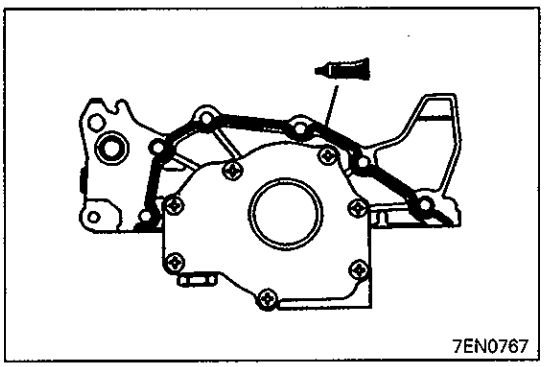

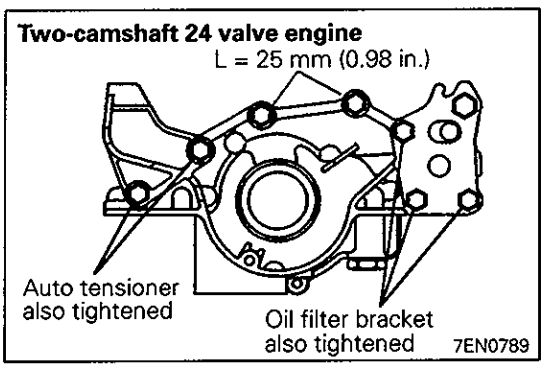

SERVICE POINTS OF REASSEMBLY

◆A◆ INSTALLATION OF OIL PUMP CASE

(1) Attach the oil pump case with the gasket in between.

◆B◆ INSTALLATION OF OIL PUMP CASE

(1) Remove the residual sealant from the cylinder block (oil pump installation surface) and oil pump.
(2) Apply a 3 mm diameter bead of sealant to the oil pump case.
Specified sealant: Three Bond 1207F or equivalent
(3) Install the oil pump case quickly (within 15 minutes after application of sealant).

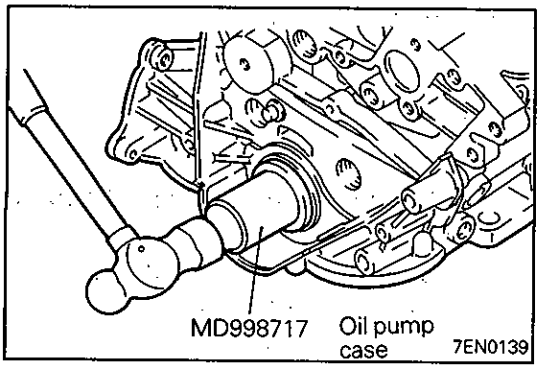

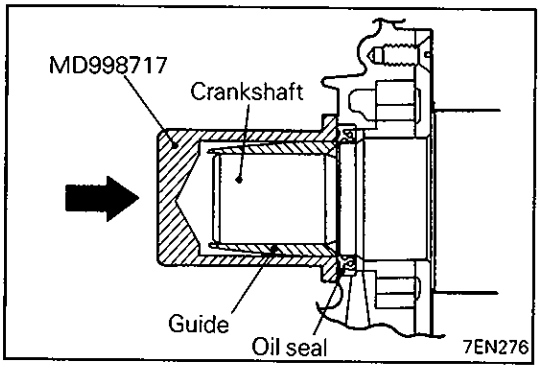

◆C◆ INSTALLATION OF CRANKSHAFT FRONT OIL SEAL

(1) Using the special tool, knock the oil seal into the oil pump case.

NOTE
Knock it as far as the surface.

◆D◆ APPLICATION OF SEALANT TO OIL PAN

(1) Clean the cylinder block and oil pan gasket surfaces.
(2) Apply liquid gasket all around the oil pan flange to a diameter of 4 mm (0.16 in.)

Caution

- **Do not let the sealant ooze into the range (A) shown in the figure on the oil pan flange.**

Specified sealant: MITSUBISHI GENUINE Part No. MD997110 or equivalent

(3) Install the oil pan within 15 mins. after applying the liquid gasket.
(4) Tighten the flange bolts in the sequence shown in the figure.

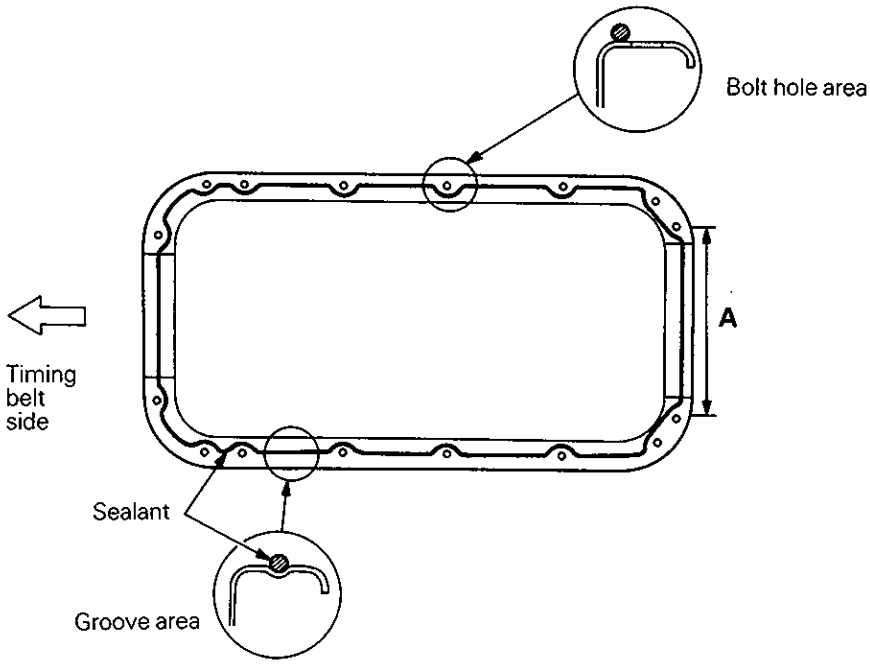

7EN258

Tightening sequence of flange bolts (bottom view)

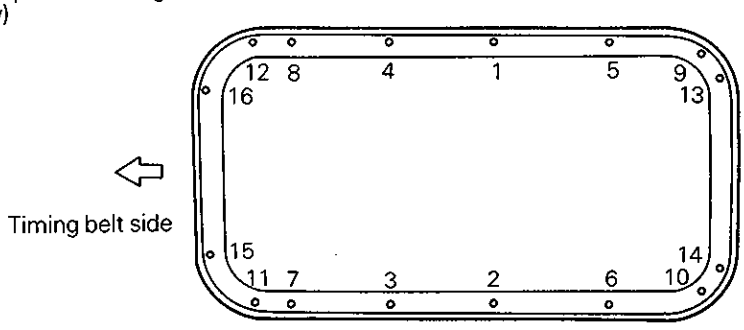

7EN259

© Mitsubishi Motors Corporation Aug. 1994

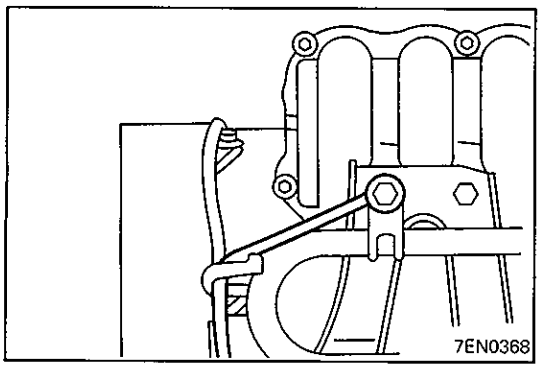

◆E◆ INSTALLATION OF THE OIL LEVEL SENSOR

Caution

- **For tightening, do not use a tool that would cause a sharp impact, such as an electric tightening tool, etc.**

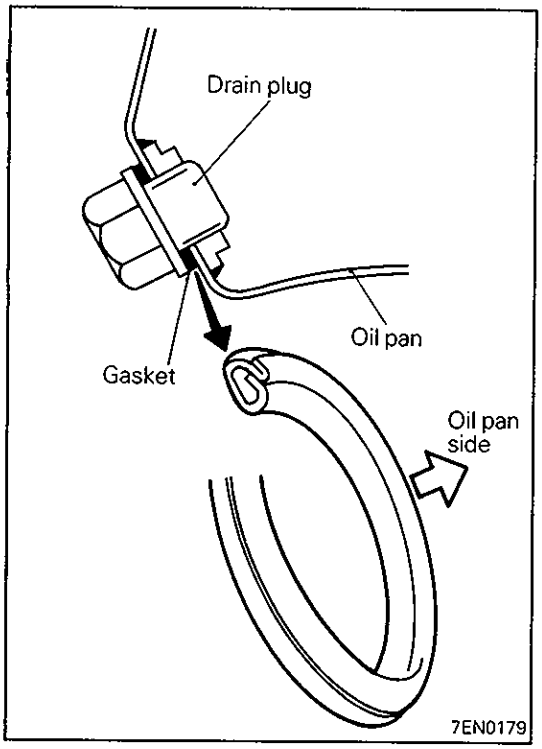

◆F◆ INSTALLATION OF DRAIN PLUG GASKET

(1) Install the drain plug gasket as illustrated.

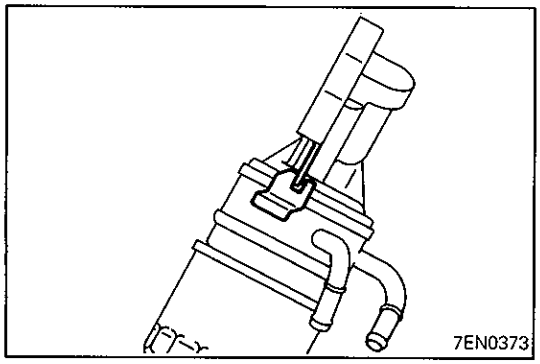

◆G◆ INSTALLATION OF OIL COOLER ASSEMBLY (Two-camshaft engine for front wheel drive vehicle)

(1) Fit the locking tab of the oil cooler in the rib of the oil filter bracket and tighten the oil cooler bolt.

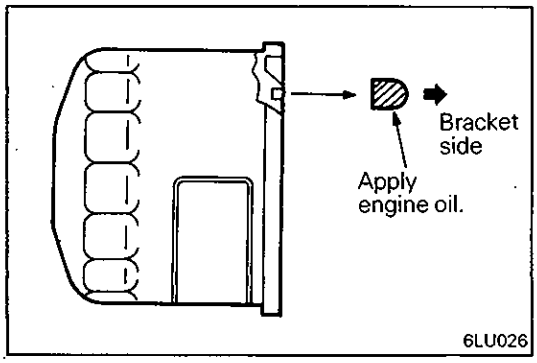

◆H◆ INSTALLATION OF OIL FILTER

(1) Clean the mounting surface on the oil filter bracket side, apply a thin coat of engine oil to the oil filter O-ring and tighten the oil filter.

© Mitsubishi Motors Corporation Aug. 1994

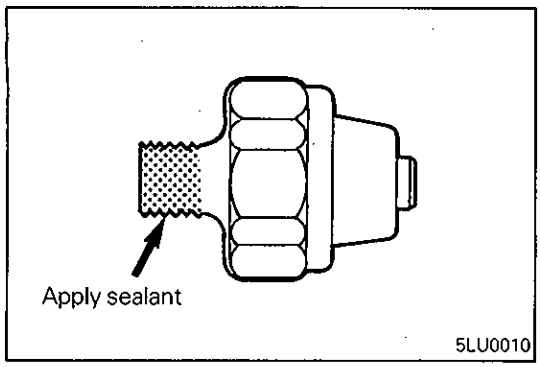

◆I◆ APPLICATION OF SEALANT TO OIL PRESSURE SWITCH

(1) Coat the threads of switch with sealant and install the switch using the special tool.

Specified sealant: 3M ATD Part No.8660 or equivalent

Caution
- **Keep the end of threaded portion clear of sealant.**
- **Avoid an overtightening.**

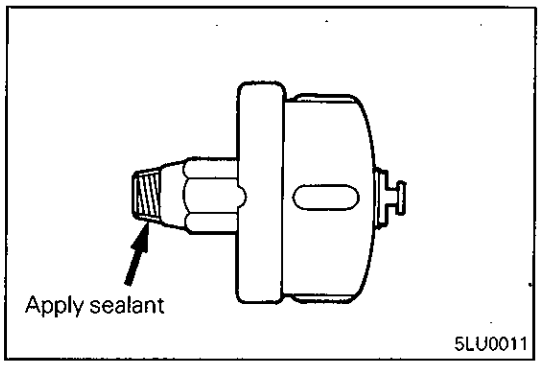

◆J◆ APPLICATION OF SEALANT TO OIL PRESSURE GAUGE UNIT (3000 GT and rear wheel drive vehicles for Australia except L400)

(1) Coat the threads of switch with sealant and install the switch using the special tool.

Specified sealant: 3M ATD Part No.8660 or equivalent

Caution
- **Keep the end of threaded portion clear of sealant.**
- **Avoid an overtightening.**

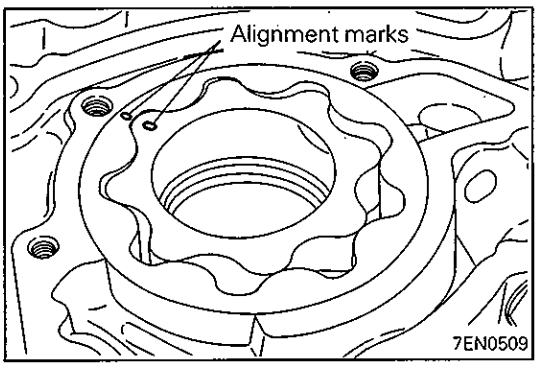

◆K◆ INSTALLATION OF OIL PUMP INNER AND OUTER ROTORS

(1) Install the outer rotor in the same direction as before noting the mark put at the time of removal. Apply engine oil to the entire rotor surface.

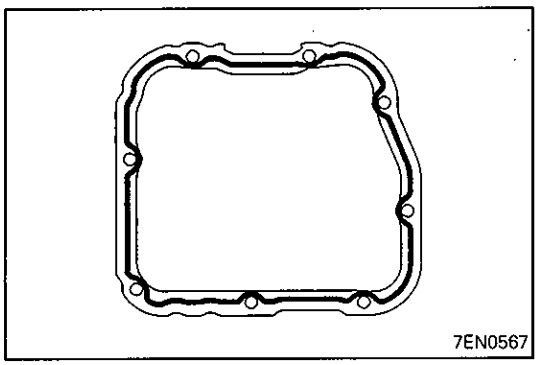

◆L◆ INSTALLATION OF OIL PAN LOWER

(1) Clean the mating surfaces of both oil pan upper and oil pan lower.

(2) Apply a 4 mm (0.16 in.) diameter bead of sealant to the flange of the oil pan lower.
Install it within 15 minutes after application of the sealant.

Specified sealant: MITSUBISHI GENUINE Part No. MD997110 or equivalent

© Mitsubishi Motors Corporation Aug. 1994

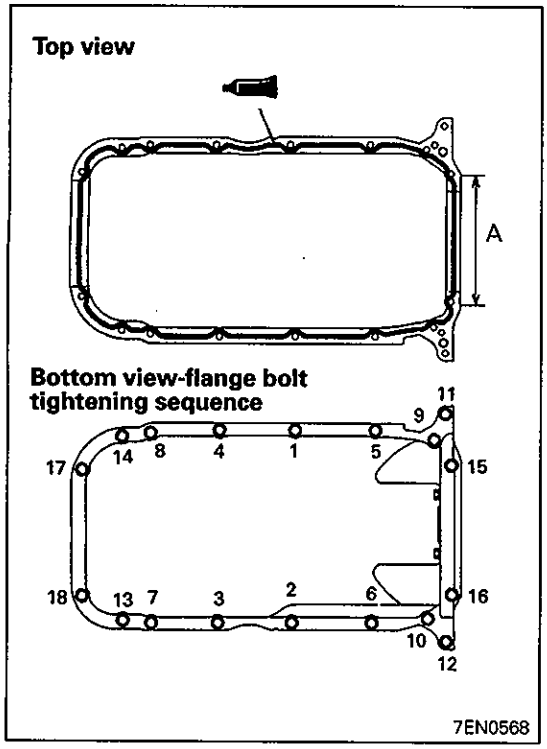

◆M◆ INSTALLATION OF OIL PAN UPPER

(1) Clean the mating surfaces of both cylinder block and oil pan upper.
(2) Apply a 4 mm (0.16 in.) diameter bead of sealant to the flange of the oil pan upper.

Caution
- **Area A in the illustration must be free from sealant that would be sqeezed out of the oil pan flange when it is tightened.**

Specified sealant:
MITSUBISHI GENUINE Part No. MD997110 or equivalent

NOTE
The oil pan should be installed within 15 minutes after application of the sealant.

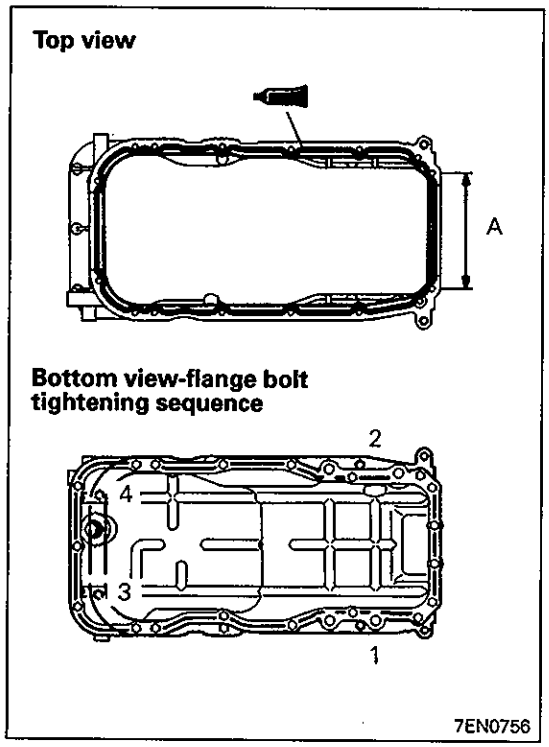

◆N◆ INSTALLATION OF OIL PAN UPPER

(1) Clean the mating surfaces of both cylinder block and oil pan upper.
(2) Apply a 4 mm (0.16 in.) diameter bead of sealant to the flange of the oil pan upper.

Caution
- **Area A in the illustration must be free from sealant that would be squeezed out of the oil pan flange when it is installed.**

Specified sealant:
MITSUBISHI GENUINE Part No. MD970389 or equivalent

NOTE
The oil pan should be installed within 15 minutes after application of the sealant.

Top view

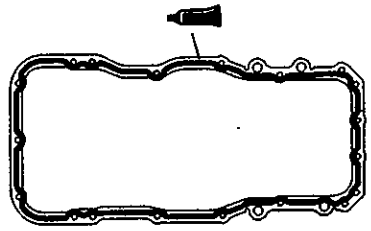

Bottom view-flange bolt tightening sequence

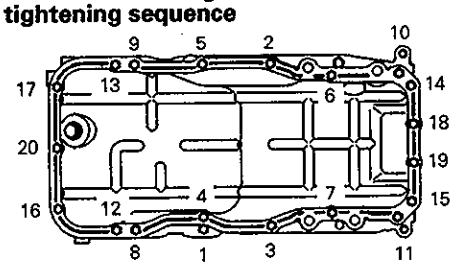

7EN0758

Liquid gasket application point (top view)

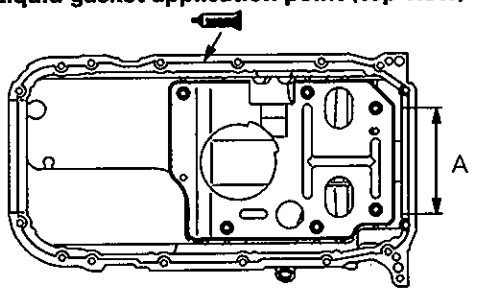

7EN1539

Flange bolt tightening sequence (bottom view)

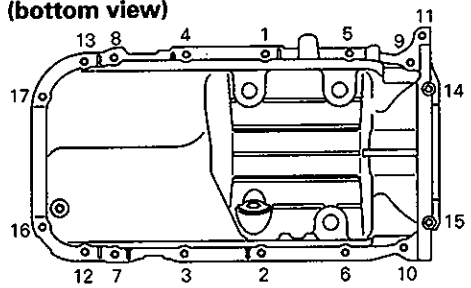

7EN1540

◗0◖ INSTALLATION OF OIL PAN LOWER

(1) Clean the mating surfaces of both oil pan upper and lower.
(2) Apply a 4 mm (0.16 in.) diameter bead of sealant to the flange of the oil pan lower.

Specified sealant:
MITSUBISHI GENUINE Part No. MD970389 or equivalent

NOTE
The oil pan should be installed within 15 minutes after application of the sealant.

◗P◖ INSTALLATION OF OIL PAN

(1) Clean the surface of the cylinder block and oil pan, to which sealant is to be applied.
(2) Squeeze a 4-mm-thick (0.157-in.-thick) bead of sealant from the tube and apply it to the entire peripheral surface of the oil pan flange.

Caution
- **When installing, use care that any sealant may not be squeezed out from the oil pan flange over the area marked with A in the illustration.**

Specified sealant: Three Band 1207F or equivalent

NOTE
Install the oil pan within 15 minutes after the sealant has been applied.

14. PISTON AND CONNECTING ROD

REMOVAL AND INSTALLATION

(6G72, 6G73)

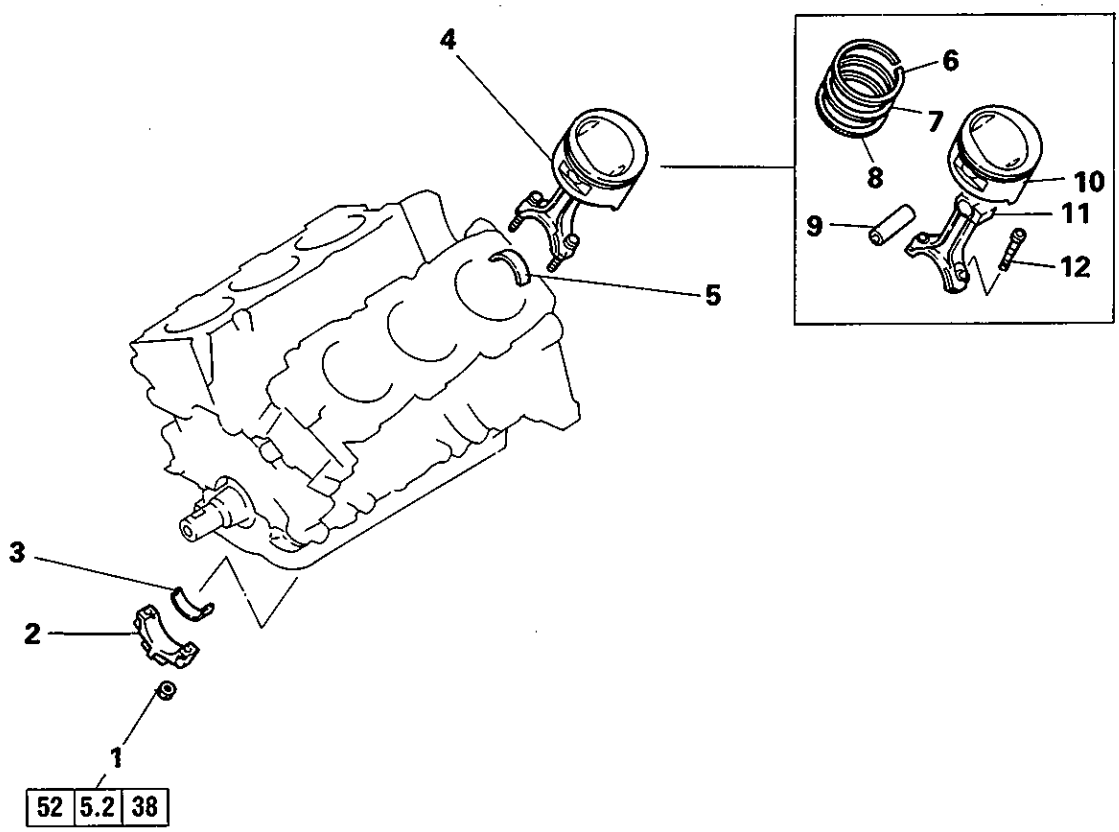

Removal steps

1. Nut
◇A◇ ◆G◆ 2. Connecting rod cap
3. Connecting rod bearing (lower)
◆F◆ 4. Piston, connecting rod assembly
5. Connecting rod bearing (upper)
◆D◆ 6. Piston ring No.1
◆D◆ 7. Piston ring No.2
◆C◆ 8. Oil ring
◇B◇ ◆A◆ 9. Piston pin
10. Piston
11. Connecting rod
12. Bolt

7EN0026

© Mitsubishi Motors Corporation Dec. 1993

REMOVAL AND INSTALLATION

(6G74)

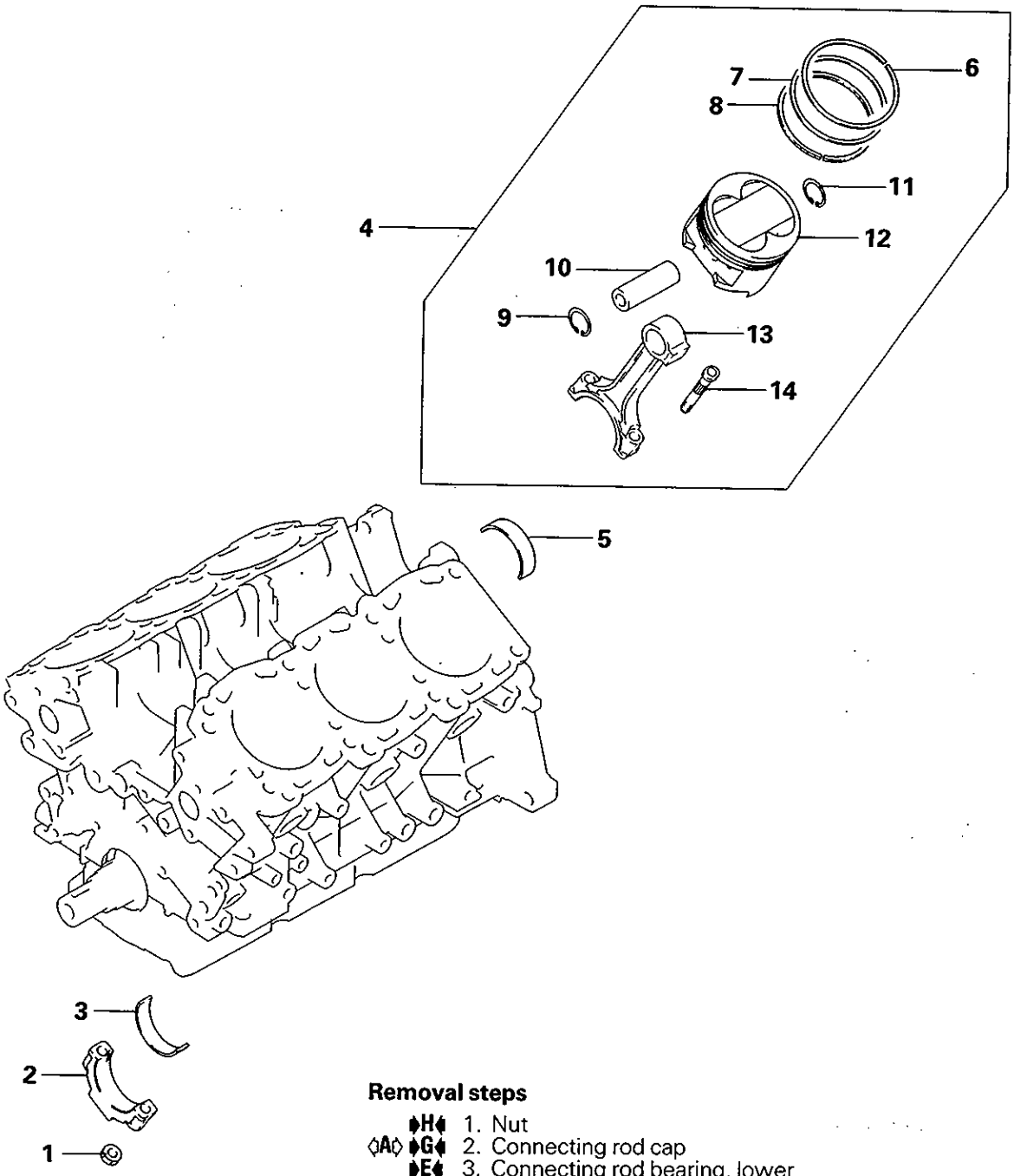

Removal steps

- ◆H◆ 1. Nut
- ◇A◇ ◆G◆ 2. Connecting rod cap
- ◆E◆ 3. Connecting rod bearing, lower
- ◆F◆ 4. Piston, connecting rod assembly
- ◆E◆ 5. Connecting rod bearing, upper
- ◆D◆ 6. Piston ring No.1
- ◆D◆ 7. Piston ring No.2
- ◆C◆ 8. Oil ring
- 9. Snap ring
- ◇C◇ ◆B◆ 10. Piston pin
- 11. Snap ring
- 12. Piston
- 13. Connecting rod
- 14. Bolt

7EN0569

© Mitsubishi Motors Corporation Dec. 1993

Added

REMOVAL AND INSTALLATION

(GDI)

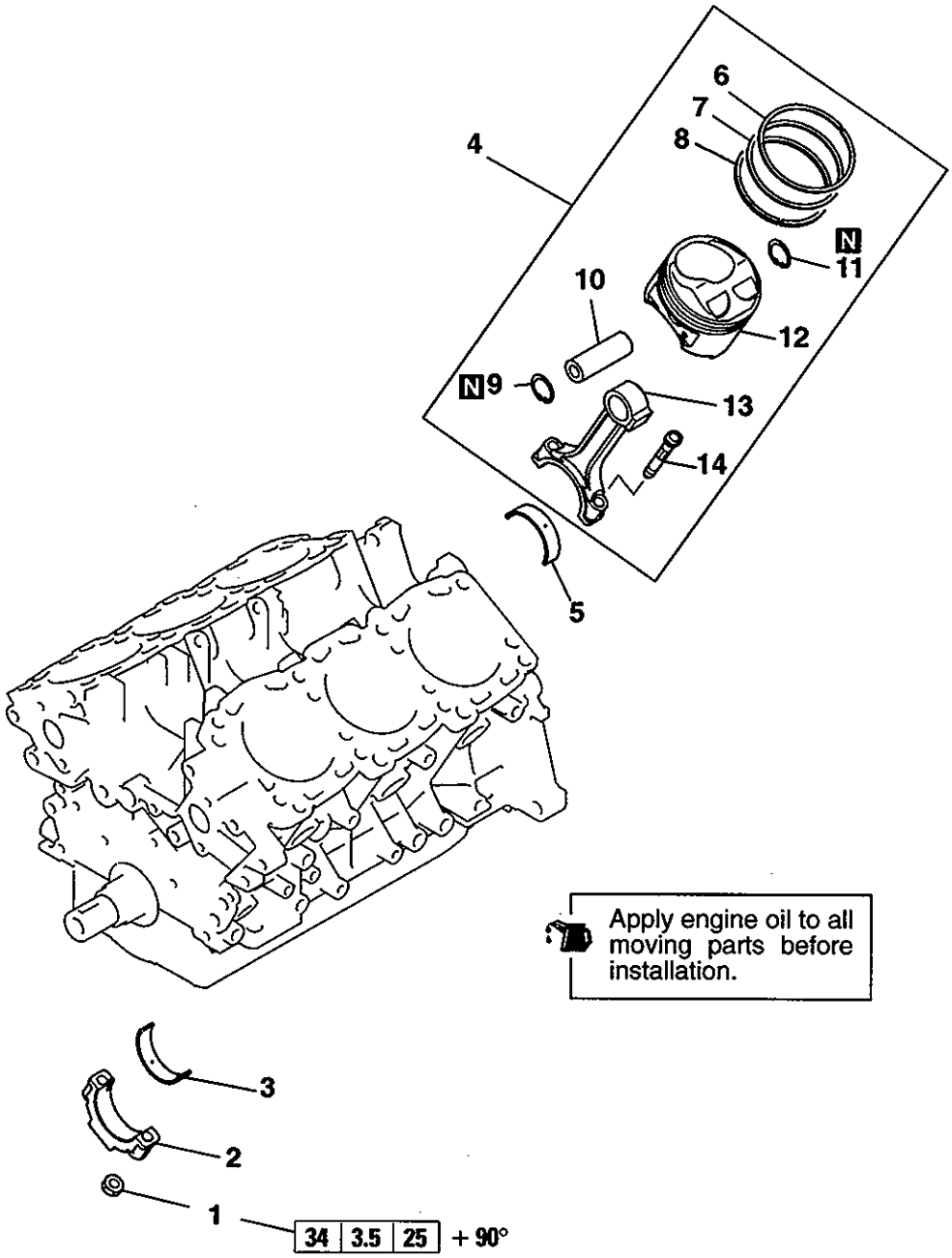

Removal steps

- ◆I◆ 1. Connecting rod cap nut
- ◇A◇ ◆G◆ 2. Connecting rod cap
- ◆E◆ 3. Connecting rod bearing, lower
- ◆F◆ 4. Piston, connecting rod assembly
- ◆E◆ 5. Connecting rod bearing, upper
- ◆D◆ 6. Piston ring No.1
- ◆D◆ 7. Piston ring No.2
- ◆C◆ 8. Oil ring
- 9. Snap ring
- ◇C◇ ◆B◆ 10. Piston pin
- 11. Snap ring
- 12. Piston
- 13. Connecting rod
- 14. Bolt

7EN1149

© Mitsubishi Motors Corporation Mar. 2000

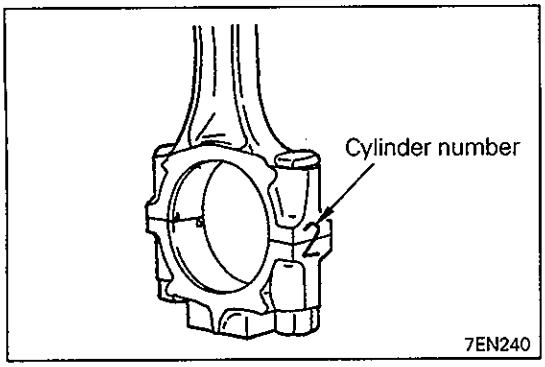

SERVICE POINTS OF REMOVAL

◊A◊ REMOVAL OF CONNECTING ROD CAP

(1) Mark the cylinder number on the side of the connecting rod big end for correct reassembly.
(2) Keep the removed connecting rods, caps, and bearings in order according to the cylinder number.

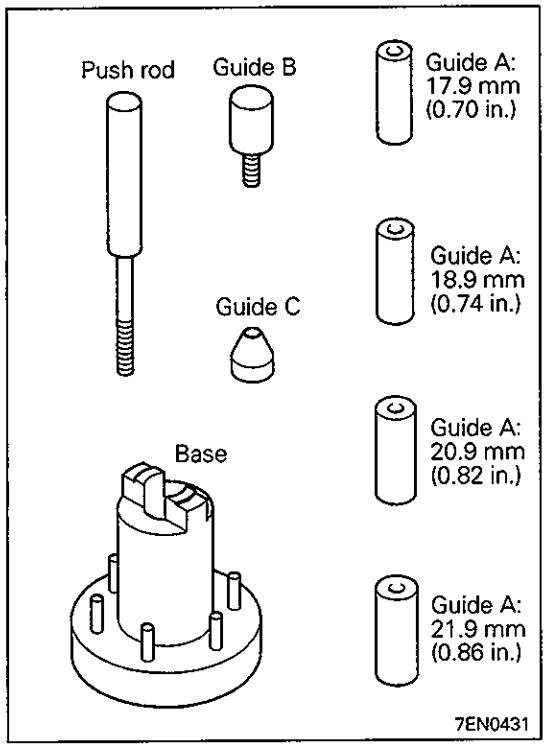

◊B◊ REMOVAL OF PISTON PIN

(1) Use the special tool, Piston Pin Setting Tool (MD998780), whose components are illustrated at the left.

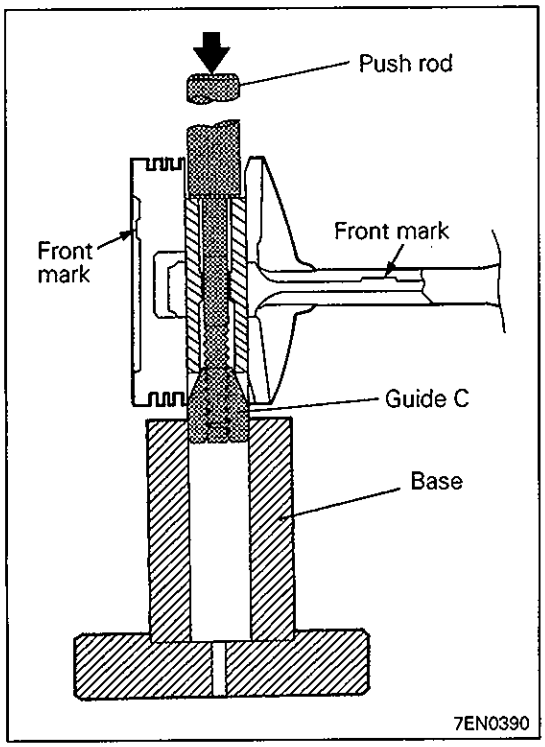

(2) Insert push rod (special tool component) in the piston from the side with the front mark (arrow) on the piston top surface.
(3) Place the piston and connecting rod assembly on base (special tool component) as illustrated with the piston front mark pointing upward.
(4) Using a press, force the piston pin out of the piston.

NOTE
Keep the removed pistons, piston pins and connecting rods of different cylinder numbers separate from one another.

© Mitsubishi Motors Corporation Sept. 1992

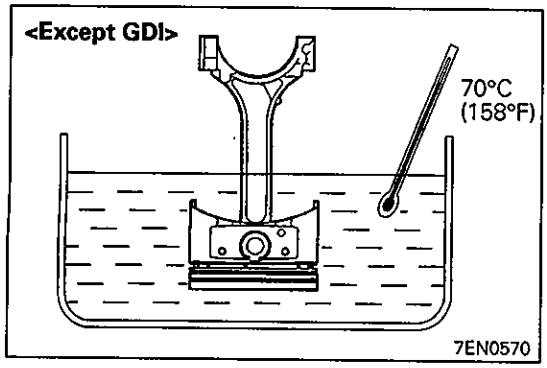

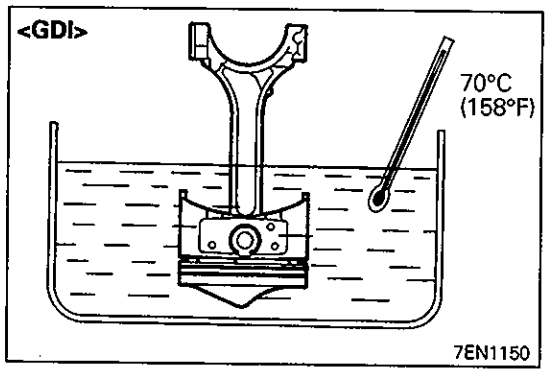

◇C◇ REMOVAL OF PISTON PIN

(1) Remove the snap rings.
(2) Heat the piston to approximately 70°C (158°F) and pull out the piston pin.

Caution

- **The clearance between the piston and the piston pin is an almost tight fit at normal temperature. Therefore, be sure to heat the piston before pulling out the piston pin. In addition, note that the piston is hot after heating.**

INSPECTION

PISTON

(1) Replace the piston if scratches or seizure is evident on its surfaces (especially the thrust surface). Replace the piston if it is cracked.

PISTON PIN

(1) Insert the piston pin into the piston pin hole with a thumb. You should feel a slight resistance. Replace the piston pin if it can be easily inserted or there is an excessive play.
(2) The piston and piston pin must be replaced as an assembly.

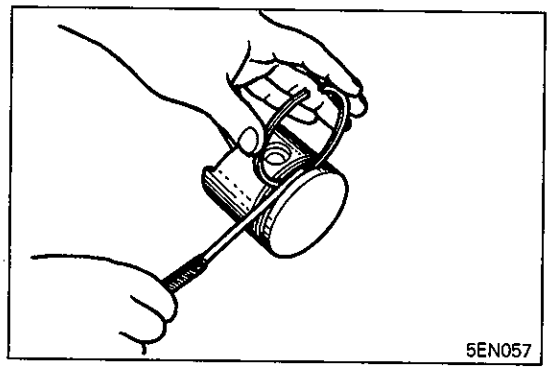

PISTON RING

(1) Check the piston ring for damage, excessive wear, and breakage and replace if defects are evident. If the piston has been replaced with a new one, the piston rings must also be replaced with new ones.
(2) Check for the clearance between the piston ring and ring groove. If the limit is exceeded, replace the ring or piston, or both.

Standard value:

No. 1
6G72, 6G74 engine
0.03 – 0.07 mm
(0.0012 – 0.0026 in.)
0.03 – 0.09 mm ..... Rear wheel drive vehicles
(0.0012 – 0.0035 in.) fabricated up to Nov. 1992
6G73 engine
0.03 – 0.07 mm (0.0012 – 0.0026 in.)
No. 2
0.02 – 0.06 mm (0.0008 – 0.0024 in.)

Limit: 0.1 mm (0.004 in.)

© Mitsubishi Motors Corporation Mar. 2000

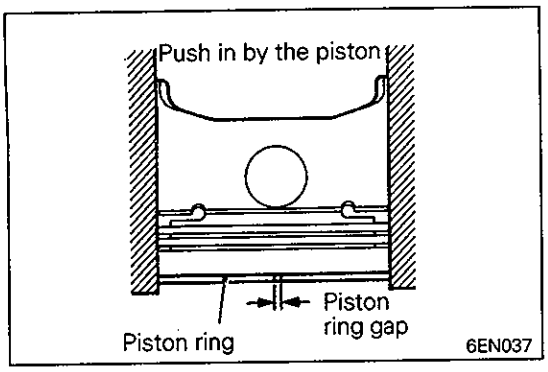

(3) Install the piston ring into the cylinder bore. Force it down with a piston, its crown being in contact with the ring, to correctly position it at right angles to the cylinder wall. Then, measure the end gap with a feeler gauge.
If the ring gap is excessive, replace the piston ring.

Standard value:
No. 1
6G72, 6G74 engine
0.30 – 0.45 mm (0.0118 – 0.0177 in.)
6G73 engine
0.25 – 0.40 mm (0.098 – 0.0157 in.)
No. 2
6G72, 6G74 engine
0.45 – 0.60 mm (0.0177 – 0.0236 in.)
0.25 – 0.45 mm (0.0098 – 0.0177 in.) ..... Rear wheel drive vehicles fabricated up to Nov. 1992
6G73 engine
0.40 – 0.55 mm (0.0157 – 0.0217 in.)
Oil
6G72 engine
0.20 – 0.60 mm (0.0079 – 0.0236 in.)
0.20 – 0.70 mm (0.0079 – 0.0276 in.) ..... Rear wheel drive vehicles fabricated up to Nov. 1992
6G73 engine
0.20 – 0.60 mm (0.0079 – 0.0236 in.)
6G74 engine
0.10 – 0.35 mm (0.0039 – 0.0138 in.)

Limit:
No. 1, No.2 ..... 0.8 mm (0.031 in.)
Oil ..... 1.0 mm (0.039 in.)

CONNECTING ROD BEARING

(1) Visually check the bearing surface for uneven contact, streaks, scratches, and seizure. Replace if defects are evident. If streaks and seizure are excessive, check also the crankshaft. If damage is present on the crankshaft, replace crankshaft.

(2) Measure the connecting rod bearing I.D. and crankshaft pin O.D. if the oil clearance exceeds the limit, replace bearing and crankshaft if necessary.

Standard value:
0.02 – 0.05 mm (0.0008 – 0.0020 in.) <6G72, 6G73>
0.03 – 0.05 mm (0.0012 – 0.0020 in.) <6G74>

Limit: 0.1 mm (0.004 in.)

NOTE
For oil clearance measuring method using the plastic gauge, refer to the section CRANKSHAFT.

© Mitsubishi Motors Corporation Dec. 1993

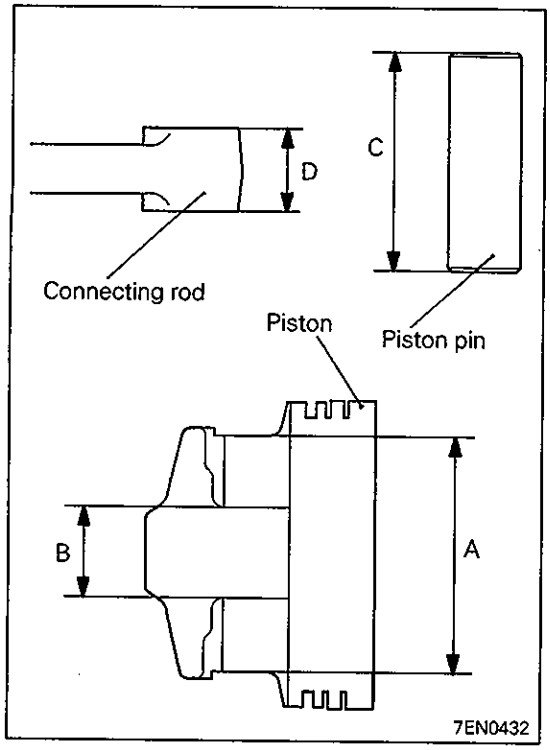

SERVICE POINTS OF INSTALLATION

◆A◆ INSTALLATION OF PISTON PIN

(1) Measure the following dimensions:
A: Piston pin hole length in piston
B: Distance between piston bosses
C: Piston pin length
D: Connecting rod small end width

(2) Obtain value "L" using the following formula.

$$L = \frac{(A - C) - (B - D)}{2}$$

(3) Insert push rod (special tool component) in the piston and attach guide A (special tool component) to the push rod.
(4) Put together the piston and the connecting rod with their front marks on the same side.
(5) Apply engine oil to the outside surface of the piston pin.
(6) Insert guide A, as assembled with the piston pin in step (3), in the hole of the piston from its front mark side.
(7) Screw guide B (special tool component) into guide A until its edge is away from guide A a distance equal to value "L" obtained in step (2) plus 3 mm (0.12 in.).

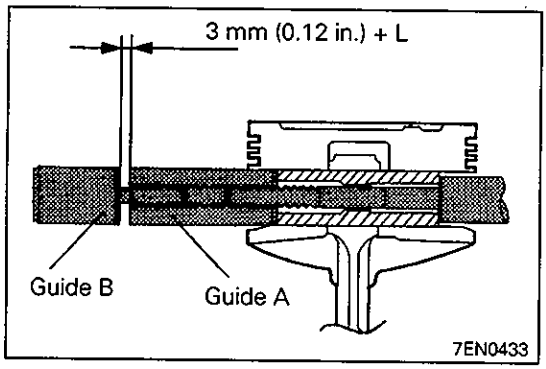

(8) Place the piston on base (special tool component) with the piston front mark pointing upward.
(9) Force in the piston pin with a press. If the pressing force is below the standard value, replace the piston and pin assembly and/or connecting rod.

Standard value:
7 500 – 17 500N (750 – 1750kg, 1653 – 3858 lbs.)

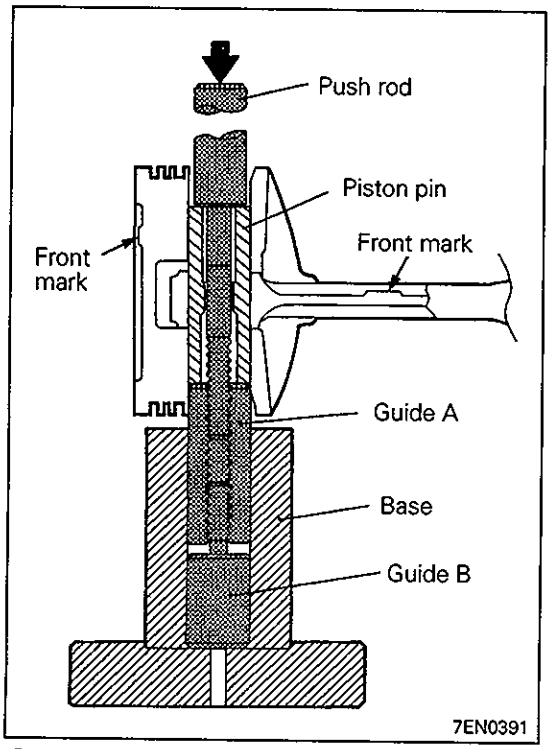

© Mitsubishi Motors Corporation Dec. 1992

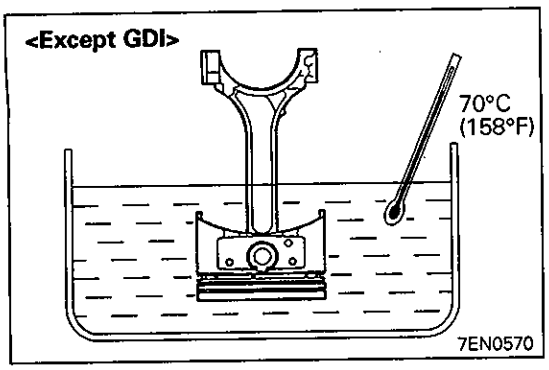

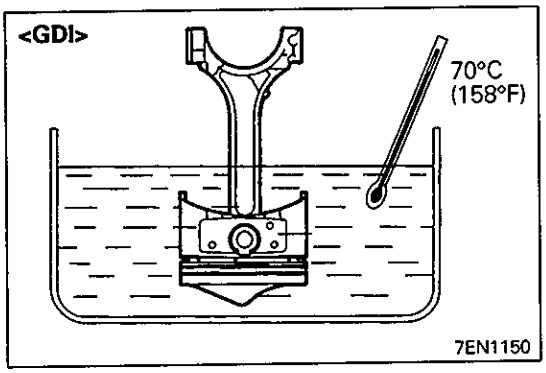

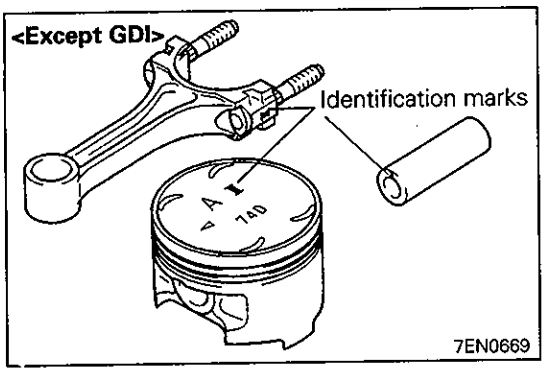

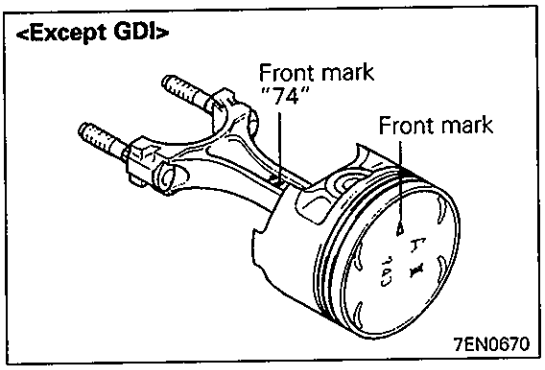

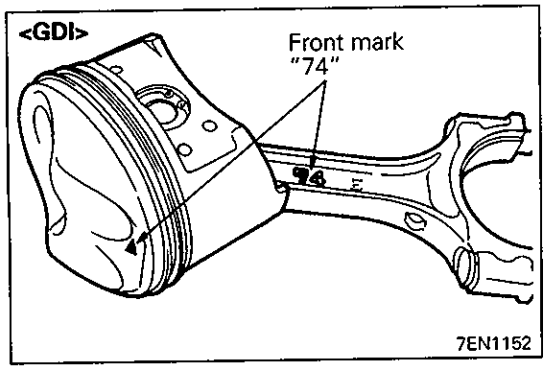

◗B◖ INSTALLATION OF PISTON PIN

(1) Heat the piston pin to approximately 70°C (158°F) and set the snap ring on one side first. Be sure to install the snap ring with the shear droop directed toward the inside.
(2) Make sure that the identification marks of the piston, piston pin and connecting rod small end are of the appropriate class. <Except GDI>

mm (in.)

	Class	I	II	III
Piston pin	Identification mark	I	No mark	III
	O.D.	22.005 – 22.007 (0.8663 – 0.8664)	22.003 – 22.005 (0.8663 – 0.8663)	22.001 – 22.003 (0.8662 – 0.8663)
Piston	Identification	I	No mark	III
	I.D.	22.003 – 22.005 (0.8663 – 0.8663)	22.001 – 22.003 (0.8662 – 0.8663)	21.999 – 22.001 (0.8661 – 0.8662)
	Clearance (at normal temperature)	–0.04 – 0 (–0.0002 – 0)	–0.04 – 0 (–0.0002 – 0)	–0.04 – 0 (–0.0002 – 0)
Connecting rod small end	Identification	I	No mark	III
	I.D.	22.012 – 22.020 (0.8666 – 0.8669)	22.010 – 22.018 (0.8665 – 0.8668)	22.008 – 22.016 (0.8665 – 0.8668)
	Clearance (at normal temperature)	0.005 – 0.015 (0.0002 – 0.0006)	0.005 – 0.015 (0.0002 – 0.0006)	0.005 – 0.015 (0.0002 – 0.0006)

(3) With the front mark of the connecting rod and that of the piston located on the same side, insert the piston pin.
(4) After insertion of the piston pin, set the other snap ring.

Caution

- **Apply ample coat of engine oil to the periphery of the piston pin and the hole of the connecting rod small end.**
- **The clearance between the piston and the piston pin is an almost tight fit at normale temperature. Therefore, be sure to heat the piston before inserting the piston pin.**
- **In addition, note that the piston is hot after heating.**

© Mitsubishi Motors Corporation Mar. 2000

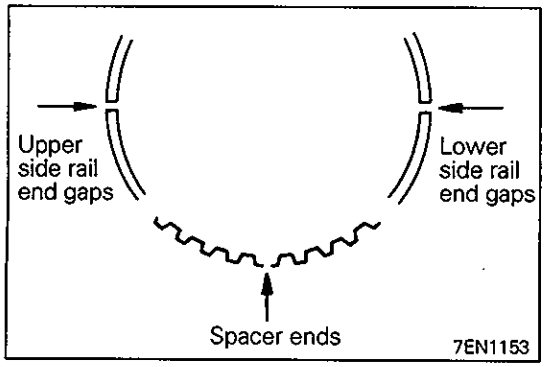

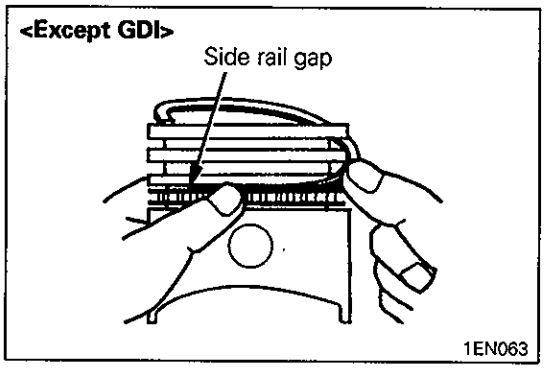

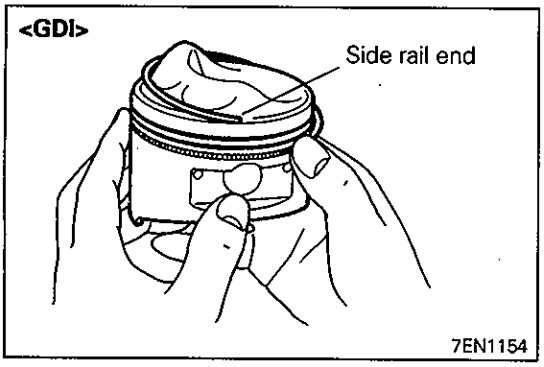

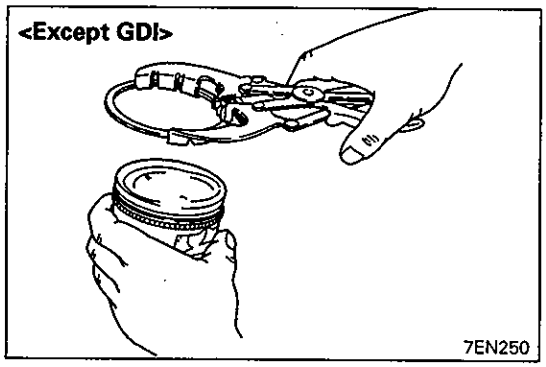

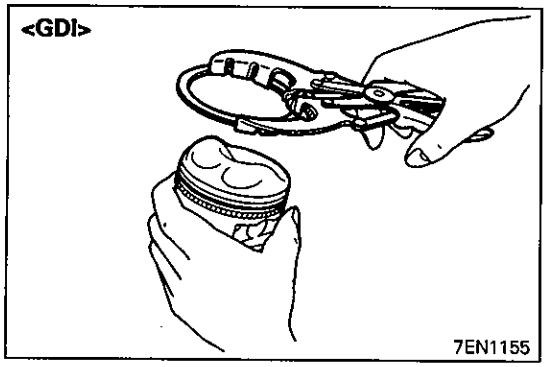

◆C◆ INSTALLATION OF OIL RING

(1) Fit the oil ring spacer into the piston ring groove.

NOTE
(1) Ensure that the end gaps of the side rails and spacer are located as shown.
(2) The spacer and side rails (new) are color-coded as detailed below according to their sizes.

Size	Identification color
S.T.D.	None
0.50 mm O.S.	Blue
1.00 mm O.S.	Yellow

(2) Install the upper side rail
To install the side rail, first fit one end of the rail into the piston groove, then press the remaining portion into position by finger. See illustration.
Use of ring expander to expand the side rail end gap can break the side rail, unlike other piston rings.

Caution
- **Unlike other piston rings, the side rail can break if it is expanded with a ring expander.**

(3) Mount the lower side rail.
(4) A three-piece oil ring, if installed correctly, should turn smoothly in either direction. Check this.

◆D◆ INSTALLATION OF PISTON RING NO.2 / PISTON RING NO.1

(1) Using a piston ring expander, fit the piston rings into position with the ring ID mark facing up.

© Mitsubishi Motors Corporation Mar. 2000

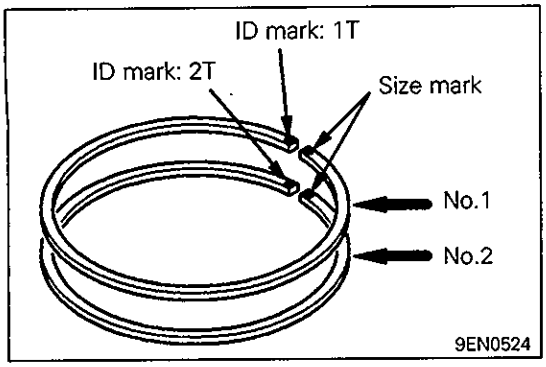

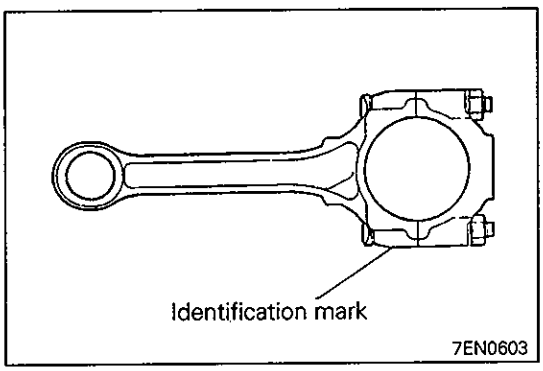

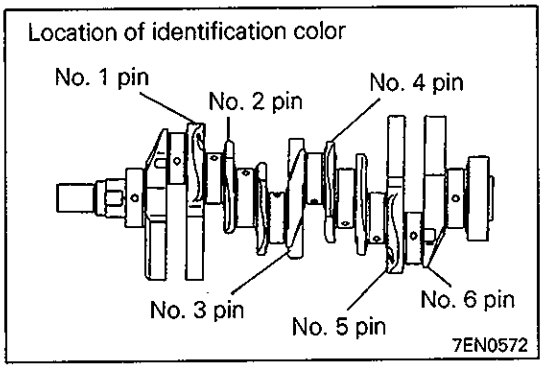

NOTE
Each piston ring is stamped with the following size mark as appropriately.

Size	Identification color
S.T.D.	(None)
0.50 mm O.S.	50
1.00 mm O.S.	100

◆E◆ INSTALLATION OF CONNECTING ROD BEARING

NOTE
The replacement connecting rod bearings for the 6G72 and 6G73 engines are supplied in the unit of a package containing all necessary number of bearings for the engine.

(1) When replacing the bearing, select the proper bearing according to the crankshaft identification color and the connecting rod identification mark and install it.

<6G74 only>

Crankshaft			Connecting rod			
Identification mark (color)		Pin O.D. mm (in.)	Big end		Bearing	
Production part	Spare part		Identification mark	I.D. mm (in.)	Identification color	Thickness mm (in.)
None	Yellow	54.994 – 55.000 (2.1651 – 2.1654)	0	58.000 – 58.006 (2.2835 – 2.2837)	Pink	1.460 – 1.486 (0.0575 – 0.0585)
			1	58.006 – 58.012 (2.2837 – 2.2839)	Red	1.486 – 1.489 (0.0585 – 0.0586)
			2	58.012 – 58.018 (2.2839 – 2.2842)	Green	1.489 – 1.492 (0.0586 – 0.0587)
None	None	54.988 – 54.994 (2.1649 – 2.1651)	0	58.000 – 58.006 (2.2835 – 2.2837)	Red	1.486 – 1.489 (0.0585 – 0.0586)
			1	58.006 – 58.012 (2.2837 – 2.2839)	Green	1.489 – 1.492 (0.0586 – 0.0587)
			2	58.012 – 58.018 (2.2839 – 2.2842)	Black	1.492 – 1.495 (0.0587 – 0.0589)
None	White	54.982 – 54.988 (2.1646 – 2.1649)	0	58.000 – 58.006 (2.2835 – 2.2837)	Green	1.489 – 1.492 (0.0586 – 0.0587)
			1	58.006 – 58.012 (2.2837 – 2.2839)	Black	1.492 – 1.495 (0.0587 – 0.0589)
			2	58.012 – 58.018 (2.2839 – 2.2842)	Brown	1.495 – 1.498 (0.0589 – 0.0590)

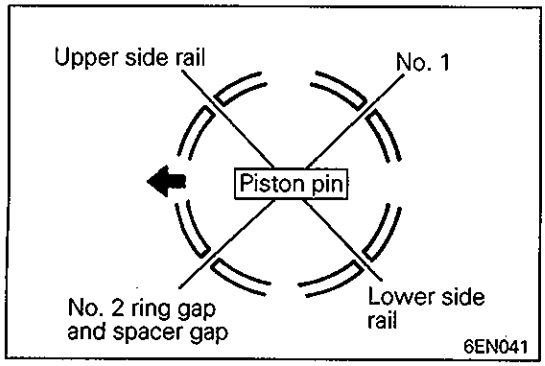

◆F◆ INSTALLATION OF PISTON AND CONNECTING ROD

(1) Liberally coat the circumference of the piston, piston ring, and oil ring with engine oil.
(2) Arrange the piston ring and oil ring gaps (side rail and spacer) as shown in the figure.
(3) Rotate crankshaft so that crank pin is on center of cylinder bore.

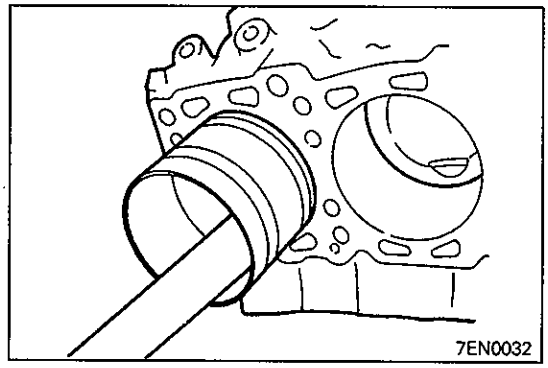

(4) Use suitable thread protectors on connecting rod bolts before inserting piston and connecting rod assembly into cylinder block.
Care must be taken not to nick crank pin.
(5) Using a suitable piston ring compressor tool, install piston and connecting rod assembly into cylinder block.

Caution
- **Install the piston with the front mark (arrow mark) on the top of the piston facing towards the engine front (timing belt side).**

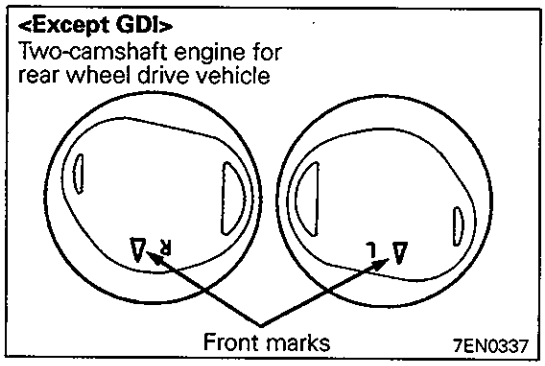

NOTE <Except GDI>
Two-camshaft engine for rear wheel drive vehicle, two types of pistons, one for cylinders 1, 3 and 5 and the other for cylinders 2, 4 and 6, have been used.
Piston with R: For cylinders 1, 3 and 5
Piston with L: For cylinders 2, 4 and 6

◆G◆ INSTALLATION OF CONNECTING ROD CAP

(1) Mate the correct bearing cap with the correct connecting rod by checking with the alignment marks marked during disassembly. If a new connecting rod is used which has no alignment mark, position the notches for locking the bearing on the same side.

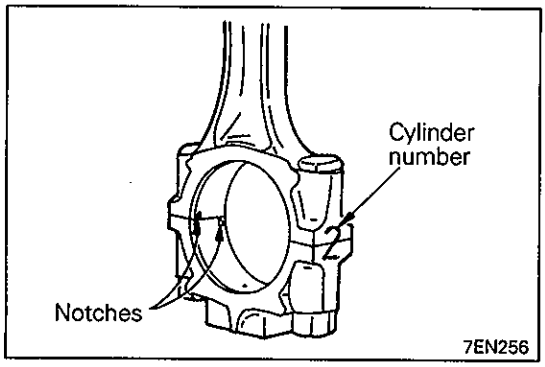

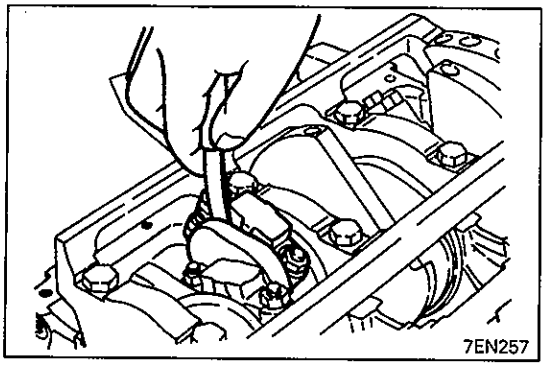

(2) Check if the thrust clearance in the connecting rod big end is correct.

Standard value: 0.10 – 0.25 mm (0.0039 – 0.0098 in.)
Limit: 0.4 mm (0.0157 in.)

© Mitsubishi Motors Corporation Mar. 2000

◆H◆ INSTALLATION OF NUT

(1) The connecting rod bolt and nut are tightened in the plastic region. Before refuse of the bolt, therefore, be sure to check it for elongation. Bolt elongation can be checked by finger-tightening the nut until it reaches the end of the bolt thread. If the nut cannot be tightened smoothly to the final position, the bolt thread is elongated. Therefore, replace the bolt.
(2) Before installation of the nut, apply engine oil to the thread of the nut.
(3) Install the nuts to the respective bolts and finger-tighten. Then tighten these nuts alternately to ensure that the cap is assembled properly.
(4) Tighten the nuts to 34 Nm (3.5 kgfm, 25 ft.lbs.) torque and then give a 90 – 110° turn to them.

◆I◆ INSTALLATION OF CONNECTING ROD CAP NUT

(1) Since the plastic region tightening method has been employed for the connecting rod bolts and nuts, be sure to check the bolts for elongation before reuse. Bolts can be checked for elongation by finger-screwing the nut to the end of the bolt threads. If the nut cannot be screwed to the end smoothly, it indicates that the bolt threads have elongated. In this case, replace the bolt with a new one.
(2) Before mounting the nut, coat the nut threads and seating surface with engine oil.
(3) After the nut has been mounted to each bolt and tightened finger-tight, alternately tighten nuts as follows to install caps properly.
(4) Tighten nuts to 34 Nm {3.5 kgm, 25 ft.lbs.}.
(5) Put a paint mark to the head of the nut.
(6) With reference to the paint mark on the nut, mark the bolt with a paint mark at the position angled 90° in the nut tightening direction.
(7) Tighten the nut 90° and check that the paint marks on the nut and bolt are aligned with each other.

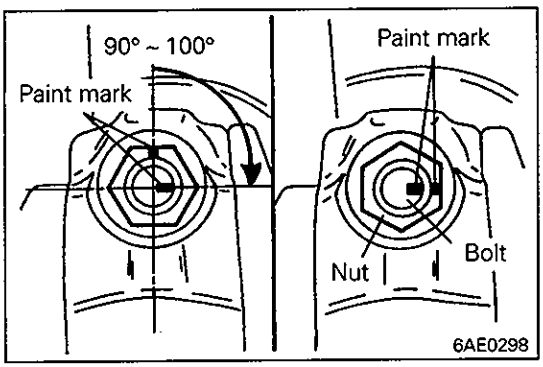

Caution

- **If the tightening angle is less than 90°, poor tightening performance could result. Make sure of the correct tightening angle.**
- **If the tightening angle exceeds 100°, completely back off the nut and start the procedure over.**

15. CRANKSHAFT, FLYWHEEL AND DRIVE PLATE

REMOVAL AND INSTALLATION

<Except GDI>

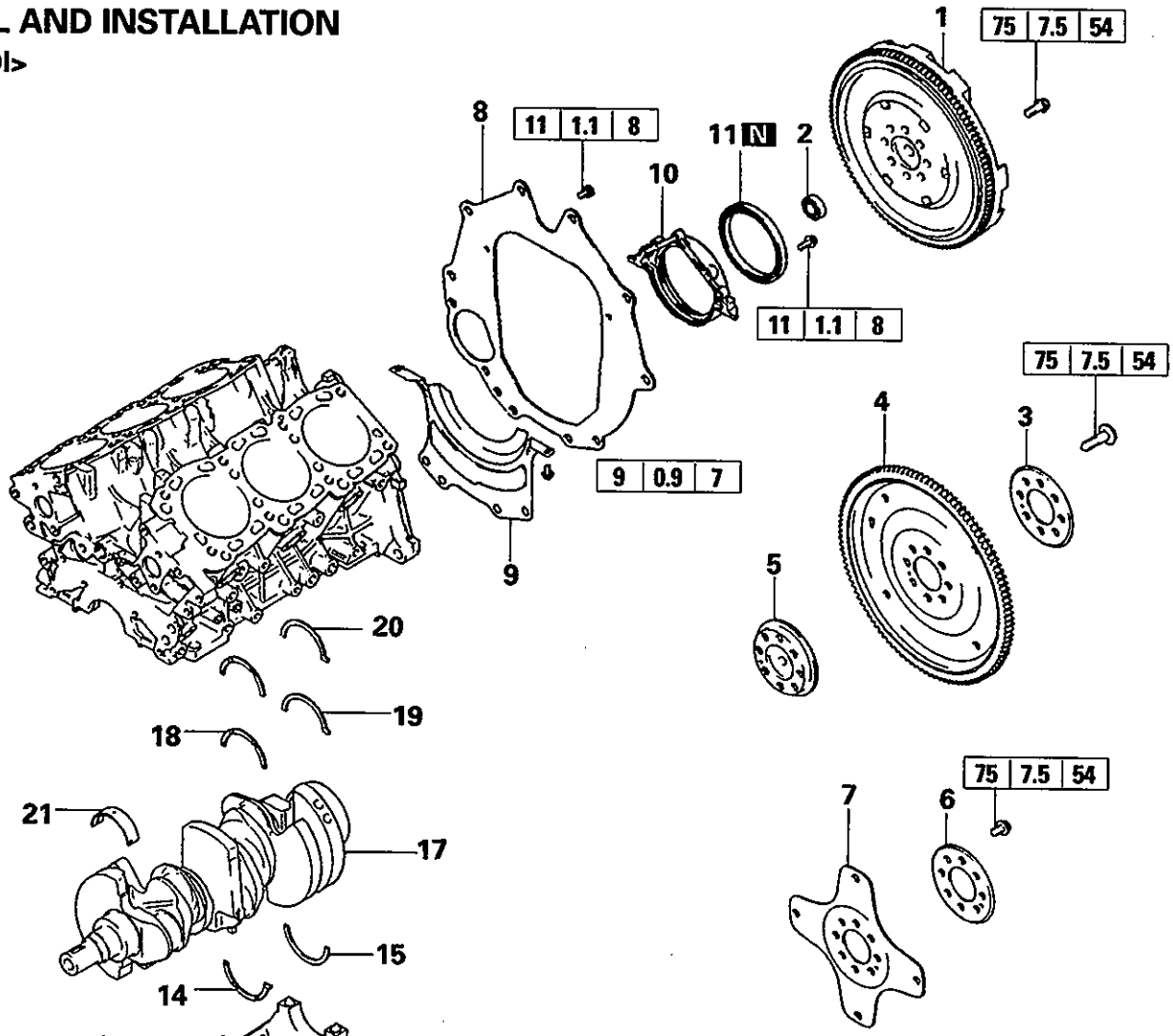

Removal steps

1. Flywheel } Manual transmission
2. Ball bearing } Manual transmission
3. Adaptor plate } Automatic transmission
4. Drive plate } Automatic transmission
5. Crankshaft adaptor } Automatic transmission
6. Adaptor plate } Automatic transmission
7. Drive plate } Automatic transmission
8. Rear plate } Automatic transmission
9. Bell housing cover (Except SIGMA for GCC with four-camshaft engine fabricated 1994 and after, SIGMA for other than GCC with four-camshaft engine fabricated 1993 and after, 6G74 engine and two-camshaft 24-valve engine)

◆D◆10. Oil seal case
◆C◆11. Crankshaft rear oil seal
◆B◆12. Bearing cap bolt
◆B◆13. Bearing cap
◆A◆14. Thrust bearing A } <6G72, 6G73>
◆A◆15. Thrust bearing B } <6G72, 6G73>
◆A◆16. Crankshaft bearing (lower)
17. Crankshaft
◆A◆18. Thrust bearing B } <6G72, 6G73>
◆A◆19. Thrust bearing A } <6G72, 6G73>
◆A◆20. Thrust bearing <6G74>
◆A◆21. Crankshaft bearing (upper)

7EN0680

© Mitsubishi Motors Corporation Mar. 2000

REMOVAL AND INSTALLATION

(GDI)

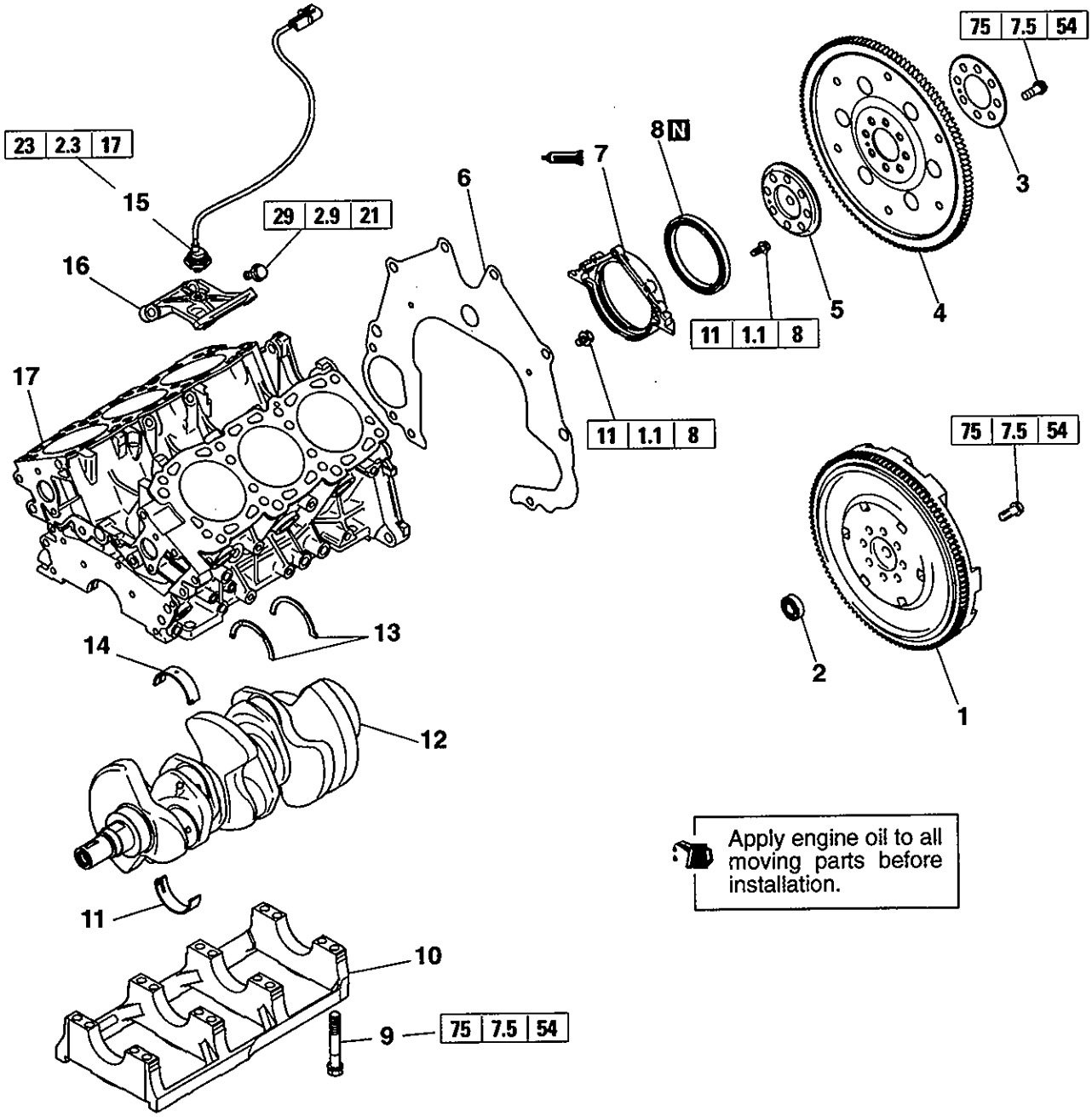

Removal steps

1. Flywheel <M/T>
2. Ball bearing <M/T>
3. Adaptor plate <A/T>
4. Drive plate <A/T>
5. Crankshaft adaptor <A/T>
6. Rear plate <A/T>
- ◆D◆ 7. Oil seal case
- ◆C◆ 8. Crankshaft rear oil seal
- ◆B◆ 9. Bearing cap bolt
- ◆B◆ 10. Bearing cap
- ◆A◆ 11. Crankshaft bearing, lower
12. Crankshaft
- ◆A◆ 13. Thrust bearing
- ◆A◆ 14. Crankshaft bearing, upper
15. Detonation sensor
16. Detonation sensor bracket
17. Cylinder block

7EN1574

© Mitsubishi Motors Corporation Mar. 2000

INSPECTION

CRANKSHAFT

If the oil clearance exceeds the limit, replace the bearing, and crankshaft if necessary.

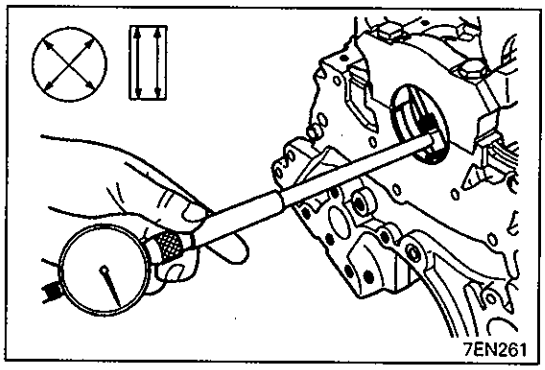

(1) Measure the outside diameter of journal and inside diameter of crankshaft bearing. If the difference between them (oil clearance) exceeds the limit, replace the crankshaft bearing and, if necessary, crankshaft.

Standard value: 0.02 – 0.05 mm (0.0008 – 0.0020 in.)

Limit: 0.1 mm (0.004 in.)

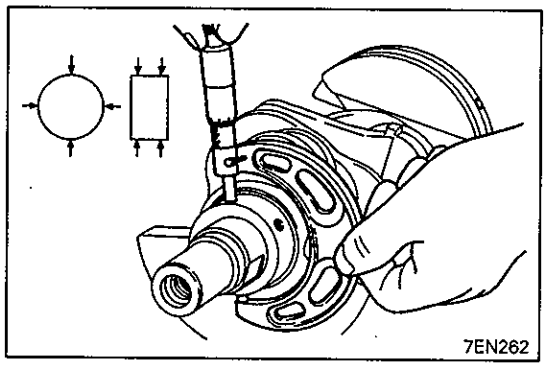

Caution

- **Do not attempt an undersize machining on the crankshaft with special surface treatment. This crankshaft can be identified by its dull gray appearance.**

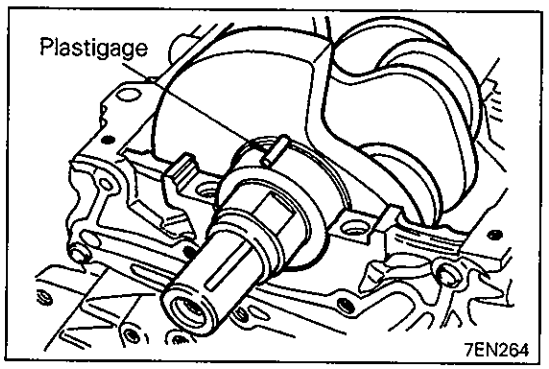

CRANKSHAFT OIL CLEARANCE (PLASTIC GAUGE METHOD)

This crankshaft oil clearance can be measured easily by using a plastic gauge, as follows:

(1) Remove oil and grease and any other foreign matters from crankshaft journal and bearing inner surface.
(2) Install the crankshaft.
(3) Cut the plastic gauge to the same length as the width of bearing and place it on journal in parallel with its axis.

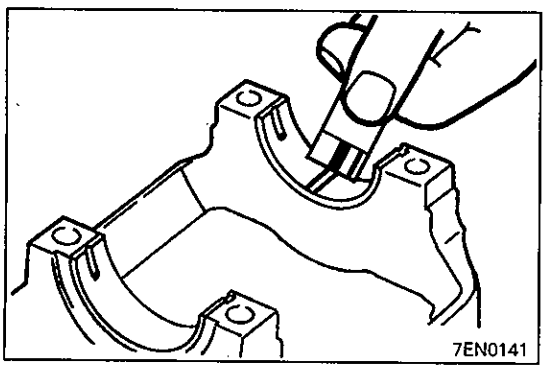

(4) Gently place the crankshaft bearing cap over it and tighten the bolts to the specified torque.
(5) Remove the bolts and gently remove the crankshaft bearing cap.
(6) Measure the width of the smashed plastic gauge at its widest section by using a scale printed on the plastic gauge bag.

Standard value:

0.02 – 0.05 mm (0.0008 – 0.0020 in.) <Except GDI>
0.02 – 0.04 mm (0.0008 – 0.0016 in.) <GDI>

Limit: 0.1 mm (0.004 in.)

© Mitsubishi Motors Corporation Mar. 2000

CRANKSHAFT REAR OIL SEAL

(1) Check oil seal lip for wear and damage.
(2) Check rubber for deterioration or hardening.
(3) Check oil seal case for cracks and damage.

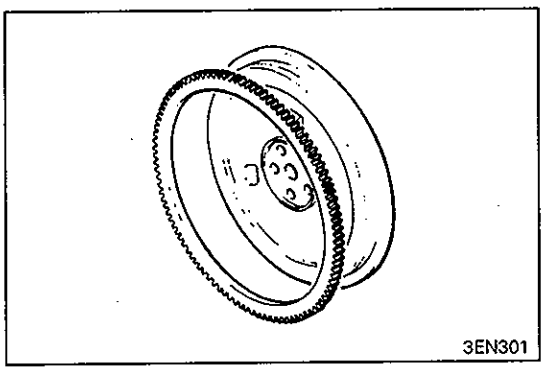
3EN301

RING GEAR

(1) Check teeth of ring gear for wear and damage. If necessary, replace the ring gear.
If the ring gear teeth are worn or damaged, also check the starter motor pinion.
To remove the ring gear, strike the ring gear at several points on its outer circumference. The ring gear cannot be removed if it is heated.
To install the ring gear, heat the ring gear to 300°C (572°F) for shrink fit.

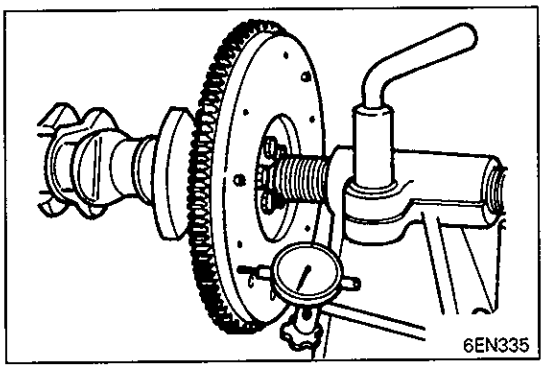
6EN335

FLYWHEEL

(1) Check the clutch disc friction surface for ridge wear, streaks, and seizure. If necessary, replace flywheel.
(2) If the runout of flywheel exceeds the limit, replace.
Limit: 0.13 mm (0.0051 in.)

DRIVE PLATE

(1) Check the drive plate for deformation, damage and cracks. If necessary, replace.

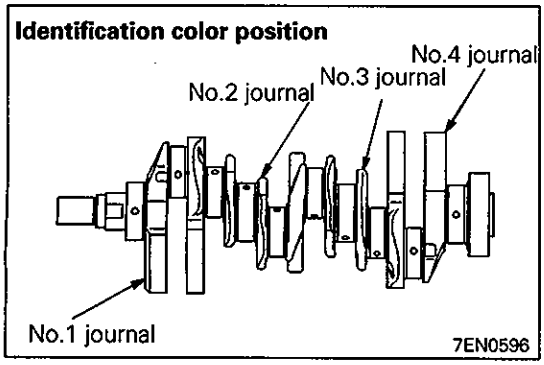

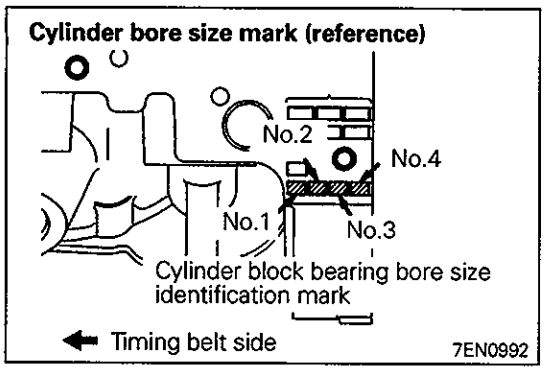

SERVICE POINTS OF INSTALLATION

◆A◆ INSTALLATION OF CRANKSHAFT BEARING

When the bearing needs replacing, select and install a proper bearing by the following procedure.

(1) Measure the crankshaft journal diameter and confirm its classification from the following table. In the case of a crankshaft supplied as a service part, identification colors of its journals are painted at the positions shown in the illustration.
(2) The cylinder block bearing bore diameter identification marks are stamped at the position shown in the illustration from front to back, beginning at No. 1.

<Two-camshaft engine>

Combination of crankshaft journal diameter and cylinder block bearing bore diameter					Bearing identification color or identification mark (for service part)
Crankshaft journal				Cylinder block bearing bore diameter identification mark	
Classification	Identification color		O.D. mm (in.)		
	Production part	Service part			
1	None	Yellow	59.994 – 60.000 (2.3620 – 2.3622)	I	Pink, 1
				II	Red, 2
				III	Green, 3
2	None	None	59.988 – 59.994 (2.3617 – 2.3620)	I	Red, 2
				II	Green, 3
				III	Black, 4
3	None	White	59.982 – 59.988 (2.3615 – 2.3617)	I	Green, 3
				II	Black, 4
				III	Brown, 5

<6G72 and 6G73 four-camshaft engines>

Combination of crankshaft journal diameter and cylinder block bearing bore diameter					Bearing identification color (for service part)
Crankshaft journal				Cylinder block bearing bore diameter identification mark	
Classification	Identification color		O.D. mm (in.)		
	Production part	Service part			
1	None	Yellow	59.990 – 59.996 (2.3618 – 2.3620)	I	Pink
				II	Red
				III	Green
2	None	None	59.984 – 59.990 (2.3616 – 2.3618)	I	Red
				II	Green
				III	Green
3	None	White	59.978 – 59.984 (2.3613 – 2.3616)	I	Green
				II	Black
				III	Brown

<6G74>

Combination of crankshaft journal diameter and cylinder block bearing bore diameter					Bearing identification color (for service part)
Crankshaft journal				Cylinder block bearing bore diameter identification mark	
Classification	Identification color		O.D. mm (in.)		
	Production part	Service part			
1	None	Yellow	63.994 – 64.000 (2.5194 – 2.5197)	I	Pink
				II	Red
				III	Green
2	None	None	63.988 – 63.994 (2.5192 – 2.5194)	I	Red
				II	Green
				III	Black
3	None	White	63.982 – 63.988 (2.5190 – 2.5192)	I	Green
				II	Black
				III	Brown

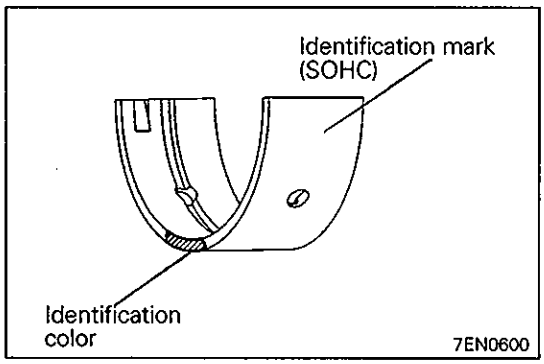

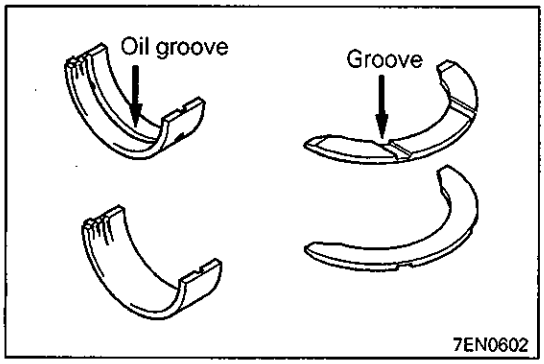

(3) Select a proper bearing from the above table on the basis of the identification data confirmed under Items (1) and (2).

[Example – Two-camshaft engine]

(1) If the measured value of a crankshaft journal outer diameter is 59.996 mm (2.3620 in.), the journal is classified as "1" in the table.
In case the crankshaft is also replaced by a spare part, check the identification colors of the journals painted on the new crankshaft. If the color is yellow, for example, the journal is classified as "1".

(2) Next, check the cylinder block bearing bore identification mark stamped on the cylinder block. If it is "I", read the "Bearing identification color" column to find the identification color of the bearing to be used. In this case, it is "pink".

(4) Install the bearing halves with oil groove on the cylinder block side.

(5) Install the bearing halves without oil groove on the bearing cap side.

(6) Install the thrust bearings on both sides of the No.3 bearing with the grooves facing outward.

© Mitsubishi Motors Corporation Mar. 2000

◆B◆ INSTALLATION OF BEARING CAP / BEARING BOLT

(1) Attach the bearing cap on the cylinder block as shown in the figure.
(2) Tighten the bearing cap bolts to the specified torque in the sequence shown in the figure.
(3) Check that the crankshaft rotates smoothly.

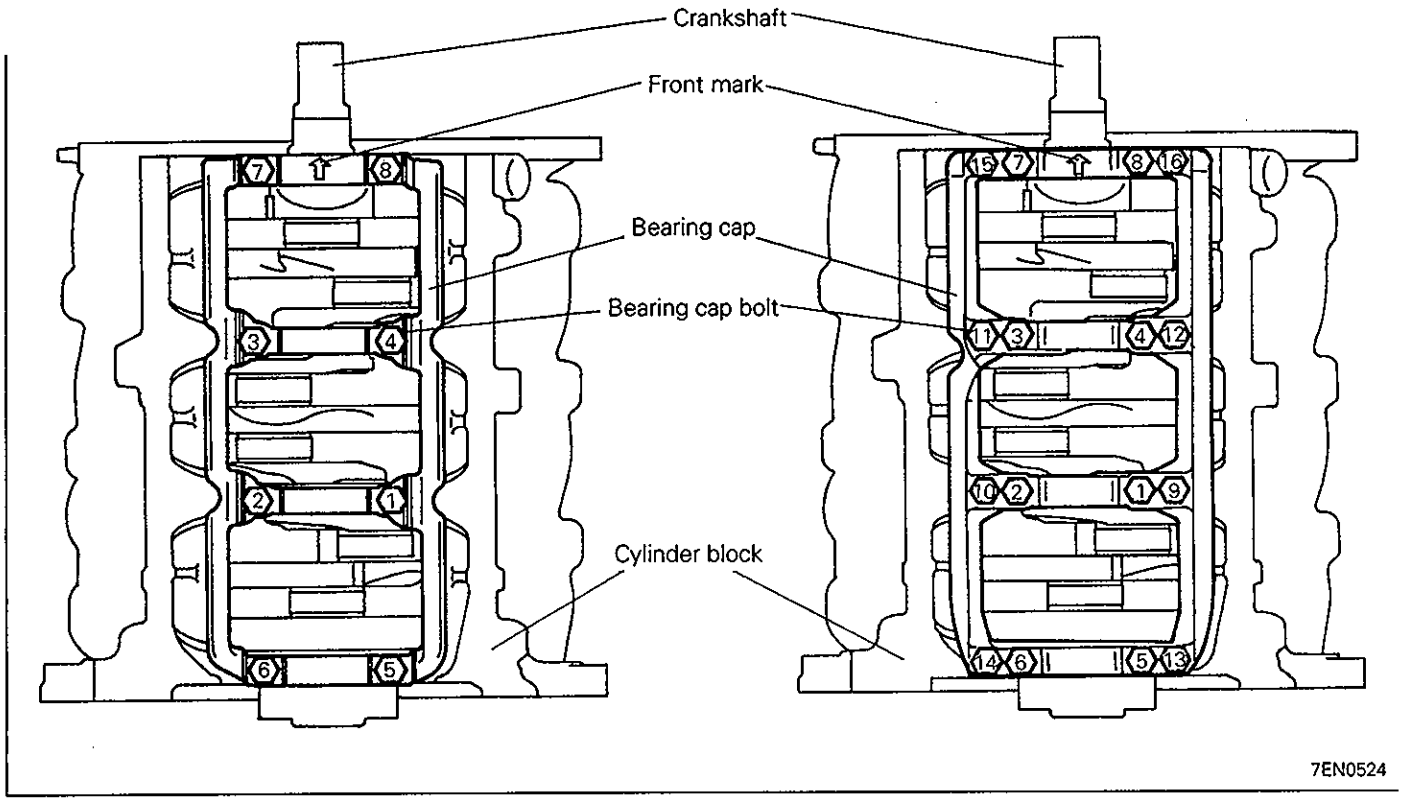

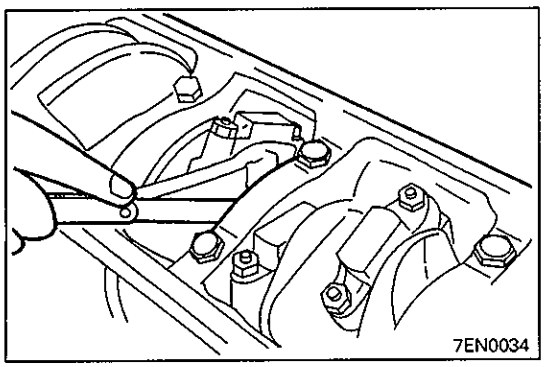

(4) Check the end play. If it exceeds the limit value, replace the thrust bearing.

Standard value : 0.05 – 0.25 mm (0.0020 – 0.0098 in.)

Limit: 0.3 mm (0.012 in.) <Except GDI>
0.4 mm (0.016 in.) <GDI>

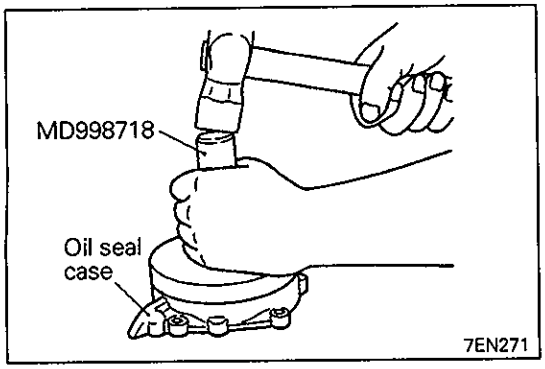

◆C◆ INSTALLATION OF CRANKSHAFT REAR OIL SEAL

(1) Using the special tool, press-fit a new crankshaft rear oil seal into the oil seal case.

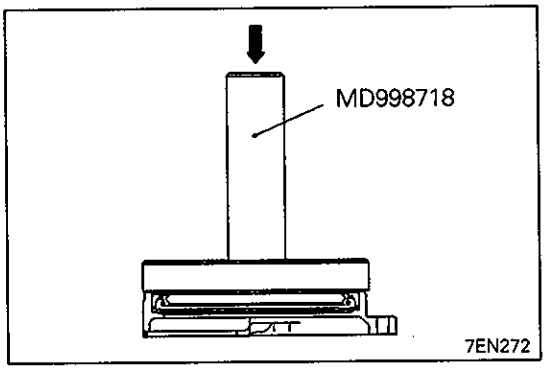

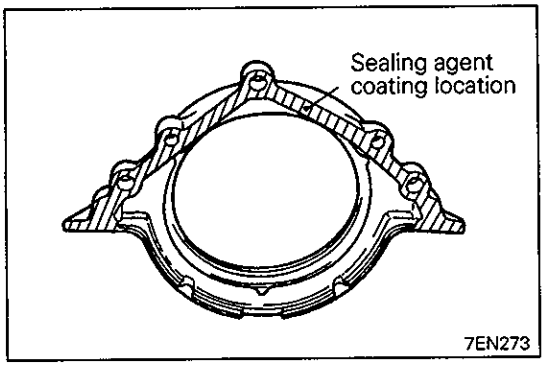

◆D◆ INSTALLATION OF OIL SEAL CASE

(1) Apply specified sealant to the area shown in the figure.

Specified sealant:
MITSUBISHI GENUINE Part No. MD997110 or equivalent

(2) Apply a small amount of engine oil to the entire circumference of the oil seal lip section, and place the oil seal on the cylinder block.

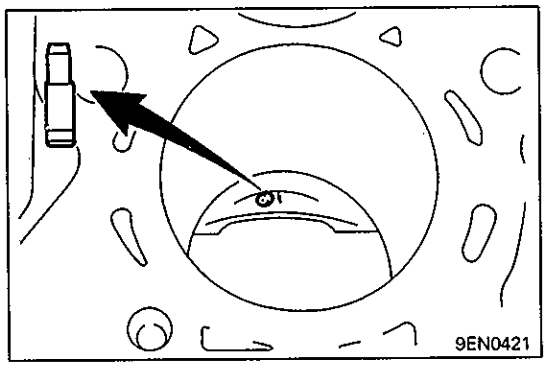

OIL JET REPLACEMENT (Model with Turbo)

(1) Using a metal rod with sufficient length, drive out the oil jets.

Caution
- **Take care not to scratch the cylinder wall.**
- **Never reuse the removed oil jets.**

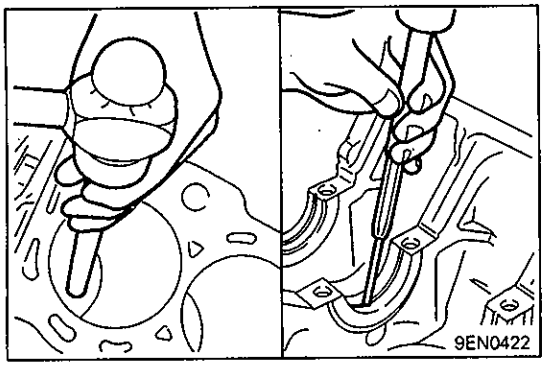

(2) Using a pin punch [4 – 5 mm (0.16 – 0.20 in.) in diameter], drive in the oil jets until they seat to the bottom.

© Mitsubishi Motors Corporation Mar. 2000

16. CYLINDER BLOCK

REMOVAL AND INSTALLATION

(Front wheel drive vehicle)

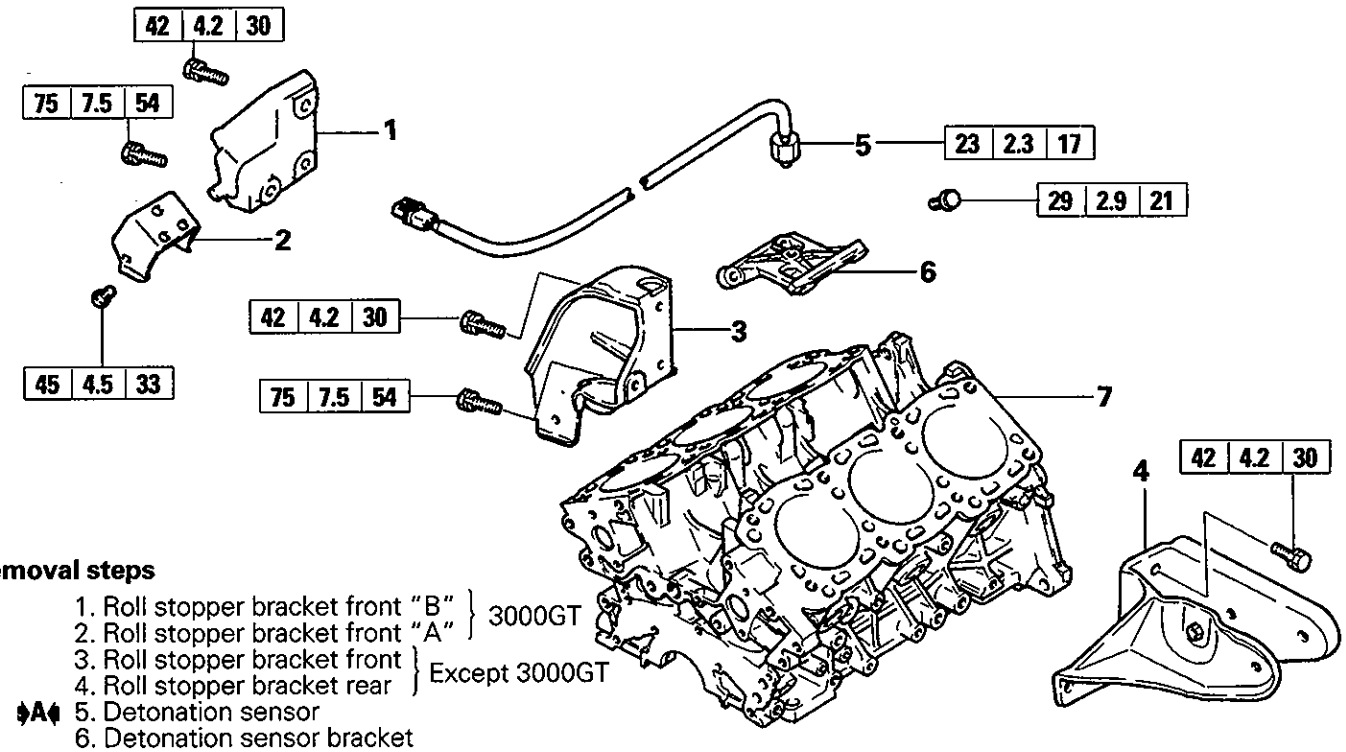

Removal steps

1. Roll stopper bracket front "B" } 3000GT
2. Roll stopper bracket front "A" }
3. Roll stopper bracket front } Except 3000GT
4. Roll stopper bracket rear }
- ◆A◆ 5. Detonation sensor
6. Detonation sensor bracket
7. Cylinder block

7EN0589

(Rear wheel drive vehicle)

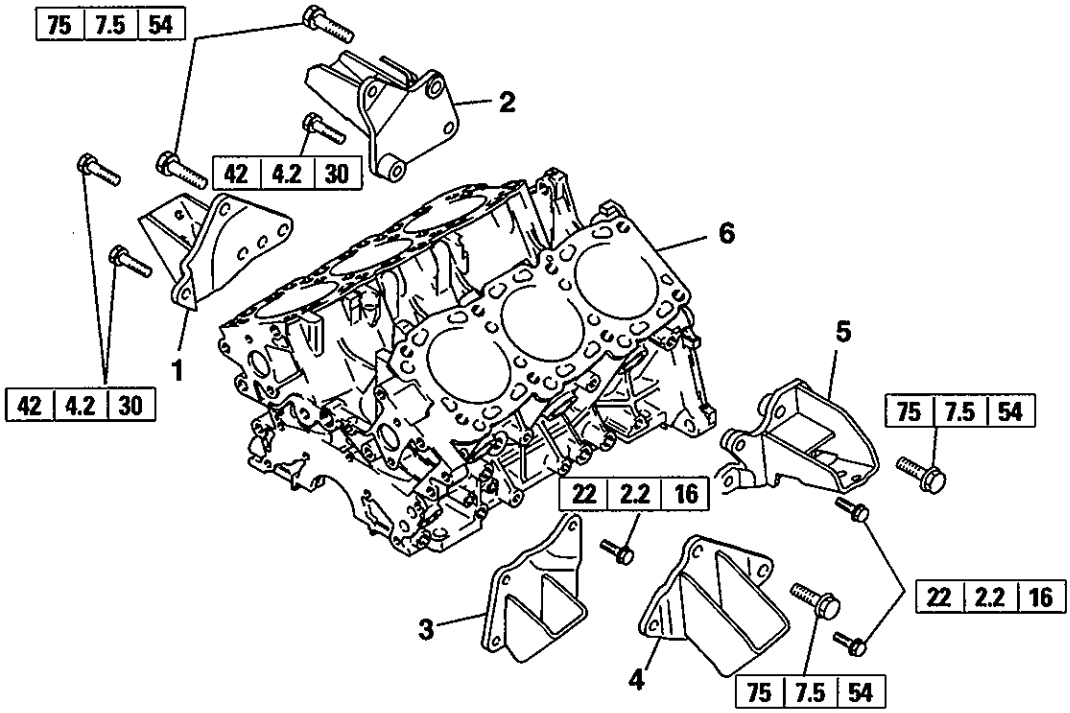

Removal steps

1. Engine support bracket, right <Except 2001 model PAJERO>
2. Engine support bracket, right <2001 model PAJERO>
3. Engine support bracket, left <Except 2001 model PAJERO>
4. Engine support bracket, left <DOHC engines except GDI>
5. Engine support bracket, left <2001 model PAJERO>
6. Cylinder block

7EN1560

INSPECTION

NOTE

(1) Clean parts to remove dust, oil, carbon deposits, and scale before starting the inspection and repair procedure.
(2) Check cylinder block for water leaks and damage before cleaning.
(3) Remove deposits from oil holes and make sure that they are not clogged.
(4) Keep parts neatly arranged according to a matched pair.

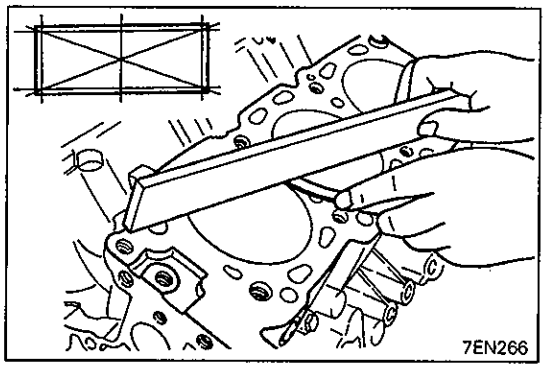

CYLINDER BLOCK

(1) Visually check for scratches, rust, and corrosion. Use also a flaw detecting agent for the check. If defects are evident, correct, or replace.
(2) Using a straightedge and feeler gauge, check the block top surface for warpage. Make sure that the surface is free from gasket chips and other foreign matter.

Standard value: 0.05 mm (0.0020 in.)
Limit: 0.1 mm (0.0039 in.)

(3) If the distortion is excessive, correct within the allowable limit or replace.

Grinding limit: 0.2 mm (0.008 in.)
The total thickness of the stock allowed to be removed from cylinder block and mating cylinder head is 0.2 mm (0.008 in.) at maximum.
Cylinder block height (when new):
210.4 – 210.6 mm (8.283 – 8.291 in.) <6G72, 6G73>
227.9 – 228.1 mm (8.972 – 8.980 in.) <6G74>

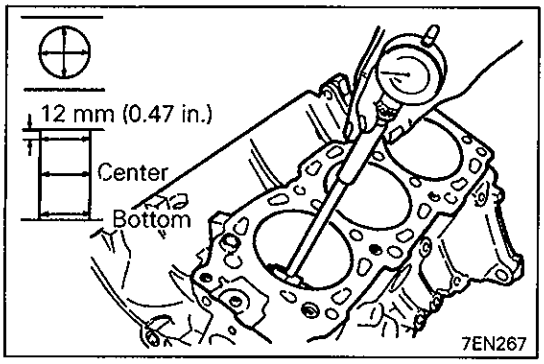

(4) Check cylinder walls for scratches and seizure. If defects are evident, correct (bored to oversize) or replace.
(5) Using cylinder gauge, measure the cylinder bore and cylindricity. If worn badly, correct cylinder to an oversize and replace piston and piston rings. Measure at the points shown in illustration.

Standard value:
Cylinder I.D.
6G72 91.10 – 91.13 mm (3.5866 – 3.5878 in.)
6G73 83.50 – 83.53 mm (3.2874 – 3.2886 in.)
6G74 93.00 – 93.03 mm (3.6614 – 3.6626 in.)
Cylindricity: 0.01 (0.0004 in.)

© Mitsubishi Motors Corporation Dec. 1993

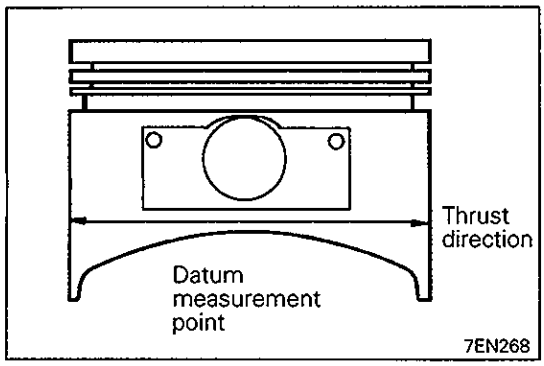

BORING CYLINDER

(1) Oversize pistons to be used should be determined on the basis of the largest bore cylinder.

Piston size identification

Up to 1993 models

Size	Identification mark
0.25 mm O.S.	0.25
0.50 mm O.S.	0.50
0.75 mm O.S.	0.75
1.00 mm O.S.	1.00

From 1994 models

Size	Identification mark
0.50 mm O.S.	0.50
1.00 mm O.S.	1.00

NOTE
Size mark is stamped on piston top.

(2) Measure outside diameter of piston to be used. Measure it in thrust direction as shown.
(3) Based on measured piston O.D. calculate boring finish dimension.

Boring finish dimension = Piston O.D. + (clearance between piston O.D. and cylinder) – 0.02 mm (0.0008 in.) (honing margin)

(4) Bore all cylinders to calculated boring finish dimension.

Caution
- **To prevent distortion that may result from temperature rise during honing, bore cylinders, working from No.2 to No.4 to No.6 to No.1 to No.3 to No.5.**

(5) Hone to final finish dimension (piston O.D. + clearance between piston O.D. and cylinder).
(6) Check clearance between piston and cylinder.

Clearance between piston and cylinder:
6G72 DOHC, 6G72 SOHC – front wheel drive vehicle, 6G74
0.03 – 0.05 mm (0.0012 – 0.0020 in.)
6G72 SOHC – rear wheel drive vehicle, 6G73
0.02 – 0.04 mm (0.0008 – 0.0016 in.)

NOTE
When boring cylinders, finish all of four cylinders to same oversize. Do not bore only one cylinder to an oversize.

SERVICE POINT OF INSTALLATION

◆A◆ INSTALLATION OF DETONATION SENSOR BRACKET

(1) Check that the bracket is in intimate contact with the cylinder block boss and tighten to specified torque.

NOTES